YAMAHA

GENUINE

PARTS CATALOGUE

MOTORCYCLE

Classic Cycle Technical Resources

A1

YA6

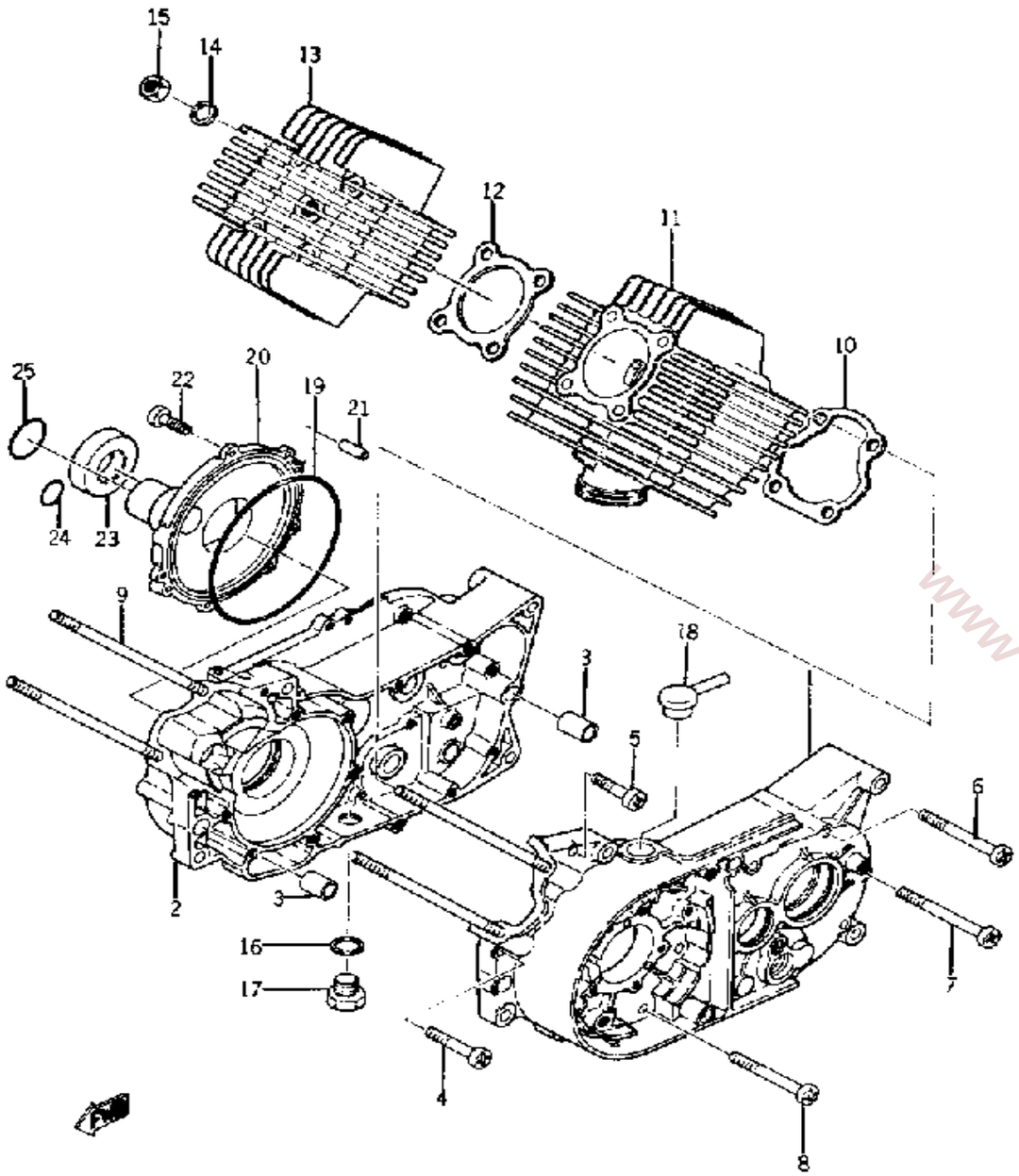

CRANKCASE

Ref. No.	Part Number	Description	Qty	Remarks
1	(137-15111-02-00)	CRANKCASE 1	1	
2	(137-15121-01-00)	CRANKCASE 2	1	
3	99510-12016-00	PIN, DOWEL	2	
4	98580-06035-00	SCREW, PAN HEAD (92501-06035)	2	
5	98511-06025-00	SCREW PAN HEAD	1	
6	98501-06070-00	SCREW, PAN HEAD	5	
7	98501-06090-00	SCREW, PAN HEAD (92501-06090-00)	1	
8	98580-06040-00	SCREW, PAN HEAD	6	
9	90116-08079-00	BOLT, STUD	4	
10	137-11351-00-00	GASKET, CYLINDER	1	
11	(137-11311-00-00)	CYLINDER 1	1	
12	137-11181-01-00	GASKET, CYLINDER HEAD 1	1	
13	(137-11111-12-00)	HEAD, CYLINDER 1	1	
14	92990-08200-00	WASHER, PLAIN	4	
15	95333-08600-00	NUT	4	
16	137-15353-00-00	GASKET, DRAIN	1	
17	90340-14119-00	PLUG, STRAIGHT SCRW (102-15351-00)	1	
18	90338-19047-00	PLUG, SPEC''L SHAPE (137-15363-01)	1	
19	(93211-19064-00)	O-RING	1	
20	(137-13551-01-00)	COVER, VALVE	1	
21	93604-14012-00	PIN, DOWEL	2	
22	98580-06018-00	SCREW, PAN HEAD	7	
23	93103-28012-00	OIL SEAL, SW-TYPE	1	
24	93210-12014-00	O-RING	1	
25	93210-26033-00	O-RING	1	

www.Classicycles.org

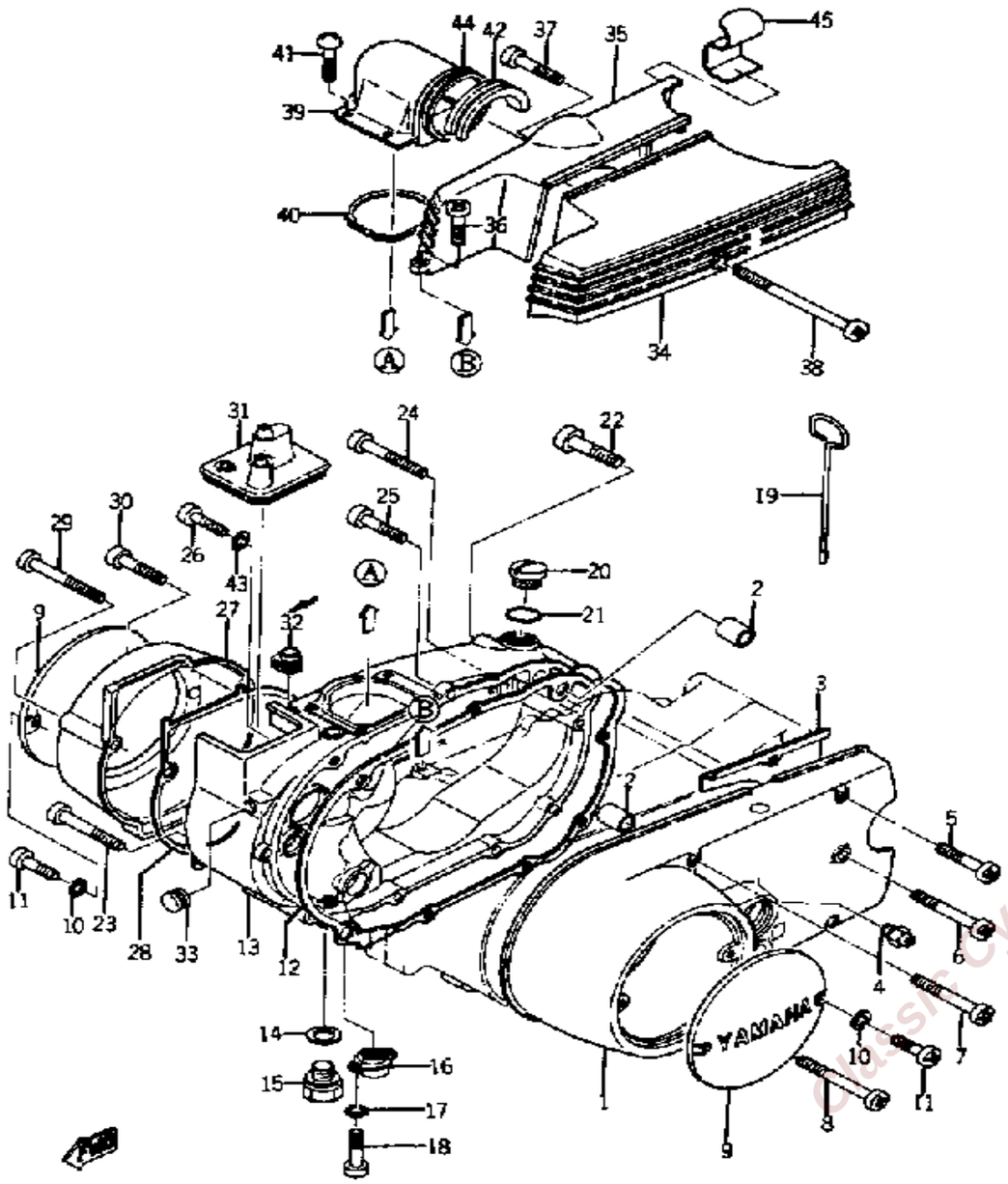

CRANKCASE COVER

Ref. No.	Part Number	Description	Qty	Remarks
1	(372-15410-00-00)	CRCS COVER ASSEMBLY L	1	
2	99530-10014-00	PIN, DOWEL	4	
3	(137-15418-00-00)	COVER, CHAIN CASE	1	
4	93700-06M03-00	NIPPLE, GREASE	1	
5	98580-06040-00	SCREW, PAN HEAD	2	
6	98580-06550-00	SCREW PAN HEAD	1	
7	98580-06545-00	SCREW PAN HEAD	1	
8	98580-06055-00	SCREW, PANHEAD (92501-06055)	1	
9	372-15415-00-00	COVER, GENERATOR	2	
10	92901-04100-00	WASHER, SPRING	4	
11	(92503-04012-00)	SCREW, PAN HEAD	4	
12	(137-15451-00-00)	GASKET, CRCS COVER	1	
13	(137-15421-04-00)	COVER, CRANKCASE R	1	
14	137-15353-00-00	GASKET, DRAIN	1	
15	90340-14119-00	PLUG, STRAIGHT SCRW (102-15351-00)	1	
16	(126-15433-00-00)	CLEANER, DRAIN	1	
17	92901-04100-00	WASHER, SPRING	2	
18	(92503-04008-00)	SCREW, PAN HEAD	2	
19	(137-15361-00-00)	GAUGE, LEVEL	1	
20	(137-15363-00-00)	PLUG, OIL	1	
	116-15363-00-00	PLUG, OIL	1	
21	(93210-22028-00)	O-RING	1	
	93210-13016-00	O-RING	1	
22	98501-06075-00	SCREW, PAN HEAD	1	
23	98580-06580-00	SCREW, PAN HEAD	1	
24	92580-06560-00	SCREW PAN HEAD	1	
25	98580-06030-00	SCREW PAN HEAD	5	

Classic Cycles Technical Resources

CONTINUED ON NEXT FRAME ➤

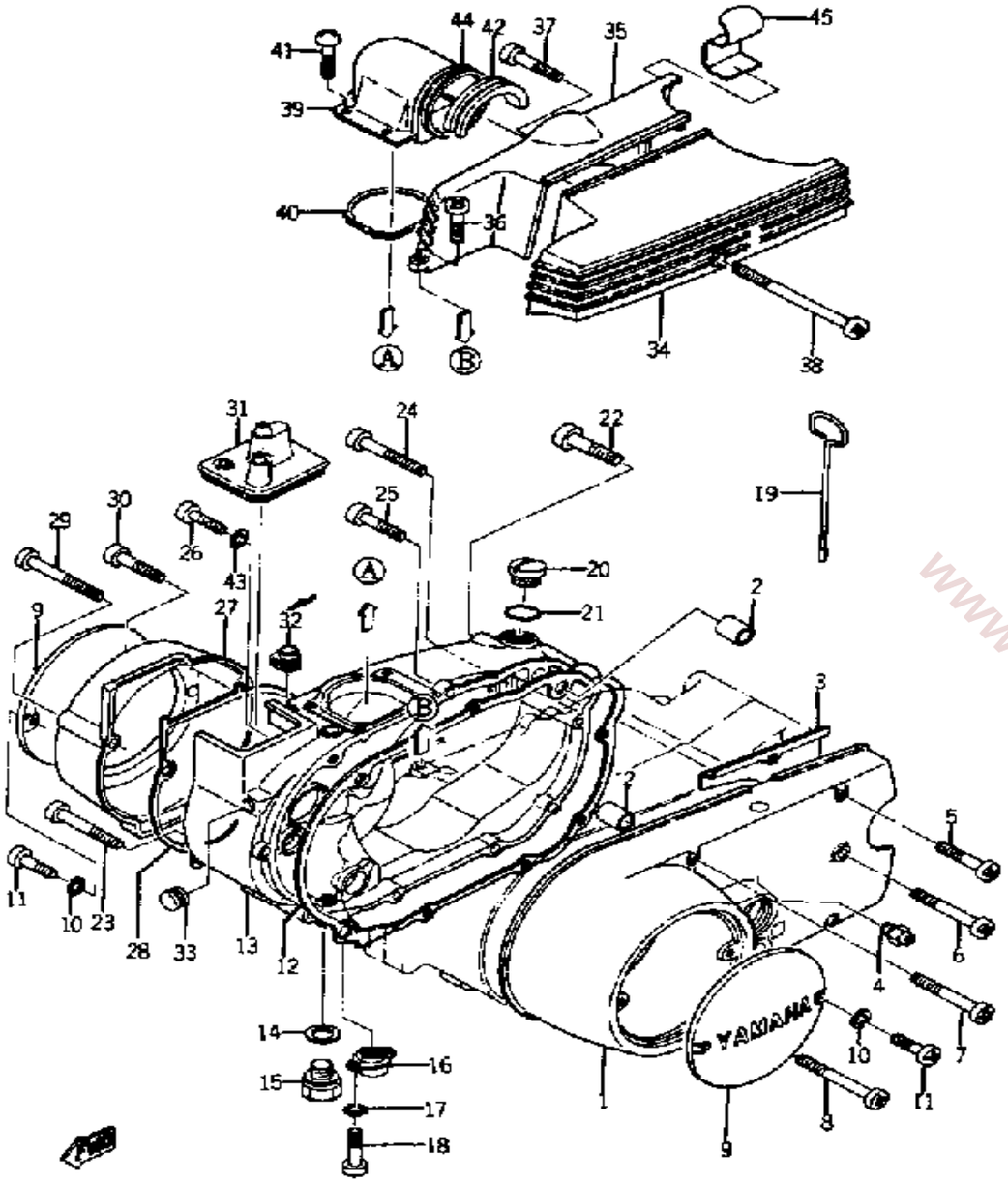

CRANKCASE COVER

Ref. No.	Part Number	Description	Qty	Remarks
26	98580-06035-00	SCREW, PAN HEAD (92501-06035)	1	
27	(137-15413-02-00)	COVER, CARBURETOR	1	
28	(137-15453-01-00)	GASKET, CARB COVER	1	
29	98580-06550-00	SCREW PAN HEAD	2	
30	98503-06014-00	SCREW, PAN HEAD (92501-06015)	1	
31	(137-14481-00-00)	CAP, CARBURETOR	1	
32	90480-12095-00	GROMMET (1) (137-15486-00)	1	
33	90480-12012-00	GROMMET	1	
36	(137-15444-00-00)	SCREW, FITTING	1	
37	98580-06018-00	SCREW, PAN HEAD	1	
38	(92501-06150-00)	SCREW, PAN HEAD	1	
39	(137-15471-00-00)	DUCT, AIR	1	
40	(137-15472-00-00)	SEAL, AIR DUCT	1	
41	92503-05008-00	SCREW, PAN HEAD	4	
42	(137-15434-00-00)	SEAL, CLEANER COVER	1	
43	90430-06017-00	GASKET	1	
44	(137-14454-00-00)	JOINT	1	
45	(90461-04010-00)	CLAMP	1	

www.Classicbicycles.org

CRANK - PISTON

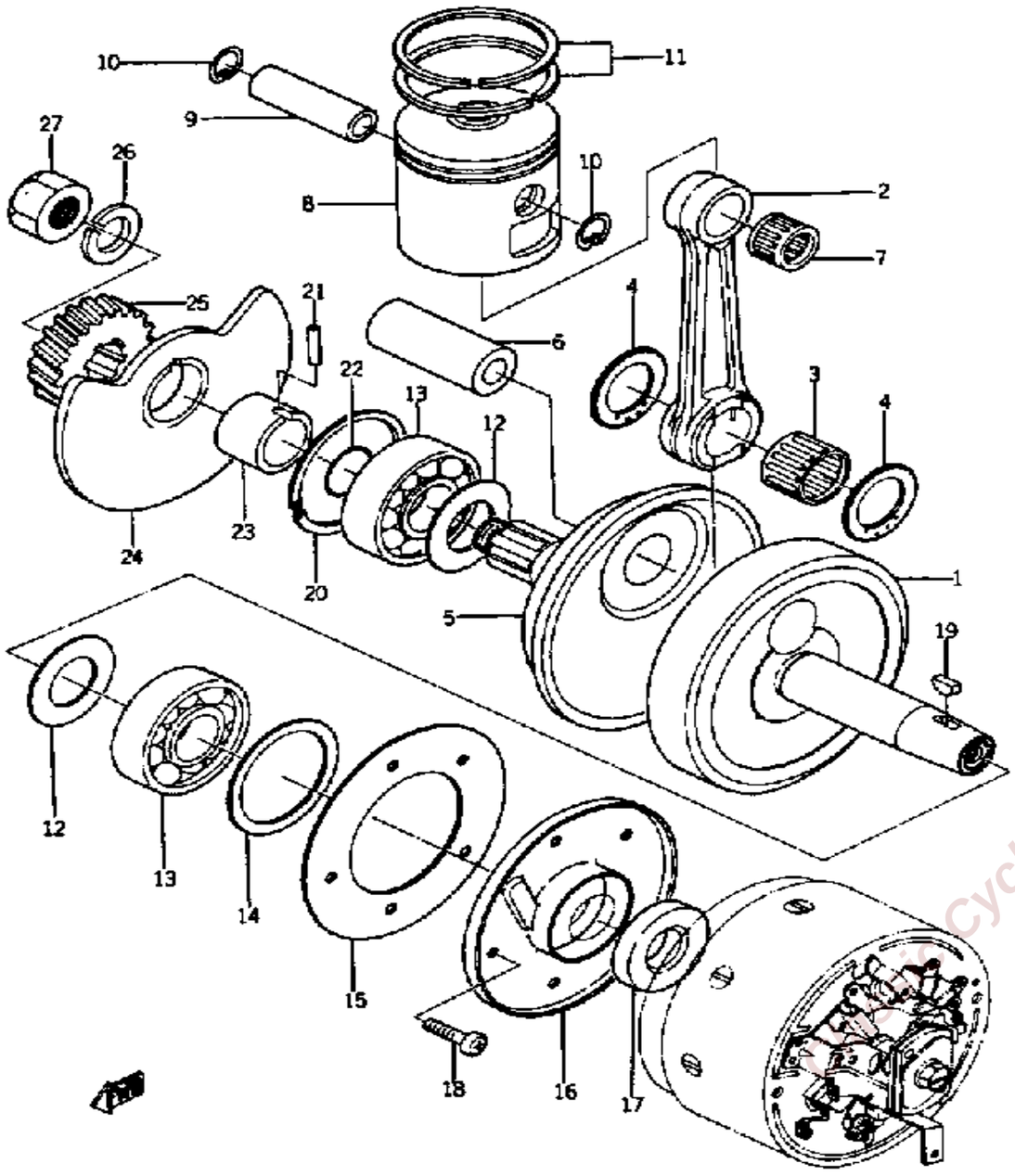

Ref. No.	Part Number	Description	Qty	Remarks
1	(137-11400-01-00)	CRANKSHAFT ASSEMBLY . . .	1	
	(137-11412-00-00)	CRANK 1	1	
	372-11635-09-00	PISTON 1 O/S 0.25 (0.25MM 1ST O.S) (137-11635-61)	1	KS
2	(137-11651-00-00)	ROD, CONNECTING	1	
	(372-11638-09-00)	PISTON 4 O/S 1. 0	1	KS
	372-11636-09-00	PISTON 2 O/S 0.50 (0.50MM 2ND O.S) (137-11636-61)	1	KS
3	(93310-42417-00)	BEARING, CYLINDER.# 0	1	
4	90209-24073-00	. WASHER, SPEC''L SHAP . . .	2	
5	(137-11422-00-00)	CRANK 2	1	
6	(137-11681-01-00)	PIN, CRANK 1	1	
7	93310-21606-00	BEARING, CYLINDER.# 0	1	
8	372-11631-09-96	PISTON STD (STD) (137-11631-61-96)	1	KS
9	137-11633-00-00	PIN, PISTON	1	
10	93450-17025-00	CIRCLIP	2	
11	(372-11601-20-00)	PISTON RINGSET 2ND	1	KS
	(372-11601-40-00)	PISTON RINGSET 4TH	1	KS
	372-11601-00-00	PISTON RINGSET STD (STD) (137-11610-00)	1	KS
	372-11601-10-00	PISTON RINGSET 1ST (0.25MM 1ST O.S) (137-11610-10)	1	
12	136-11561-00-04	SHIM, CRANK 1	2	
13	93306-30421-00	BEARING (B6304C3)	2	
14	(136-11565-00-03)	WASHER, BEARING CVR	1	
15	(137-15369-00-00)	GASKET, O/SL HSNG	1	
16	(137-15359-00-00)	HOUSING, OIL SEAL	1	

CONTINUED ON NEXT FRAME ➤

Yamaha Cycles Technical Resources

CRANK - PISTON

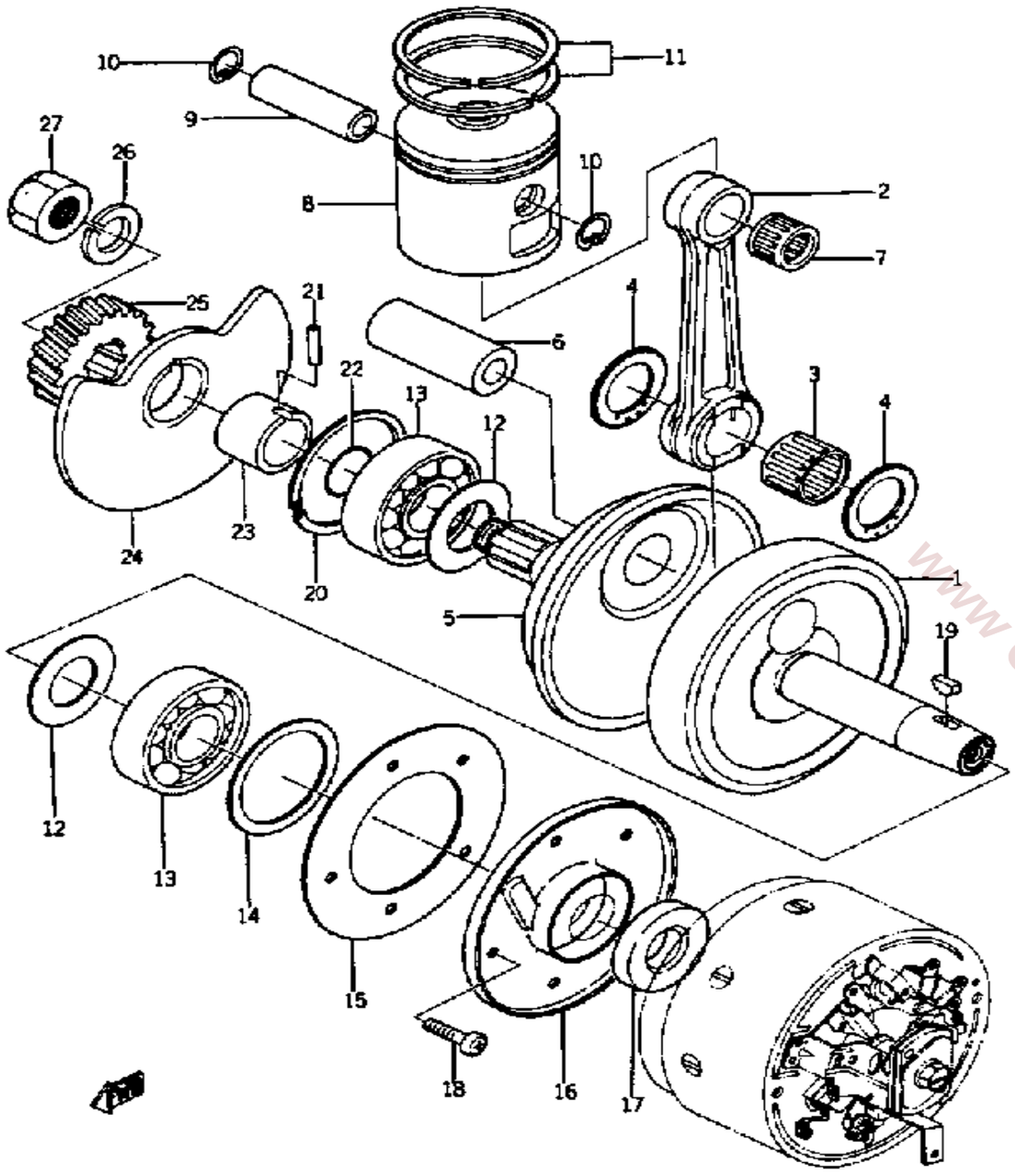

Ref. No.	Part Number	Description	Qty	Remarks
17	93103-20110-00	OIL SEAL, SW-TYPE	1	
18	92503-05008-00	SCREW, PAN HEAD	6	
19	90280-03017-00	KEY, WOODRUFF	1	
20	93450-52010-00	CIRCLIP	1	
21	93604-14012-00	PIN, DOWEL	1	
22	93210-180A6-00	O-RING	1	
23	(122-13515-02-00)	COLLAR, VALVE	1	
24	(137-13512-00-00)	VALVE, ROTARY	1	
25	(137-16111-00-00)	GEAR, PRI DRIVE	1	
26	92901-14100-00	WASHER, SPRING	1	
27	90170-14171-00	NUT	1	

www.ClassicCycles.org

CLUTCH

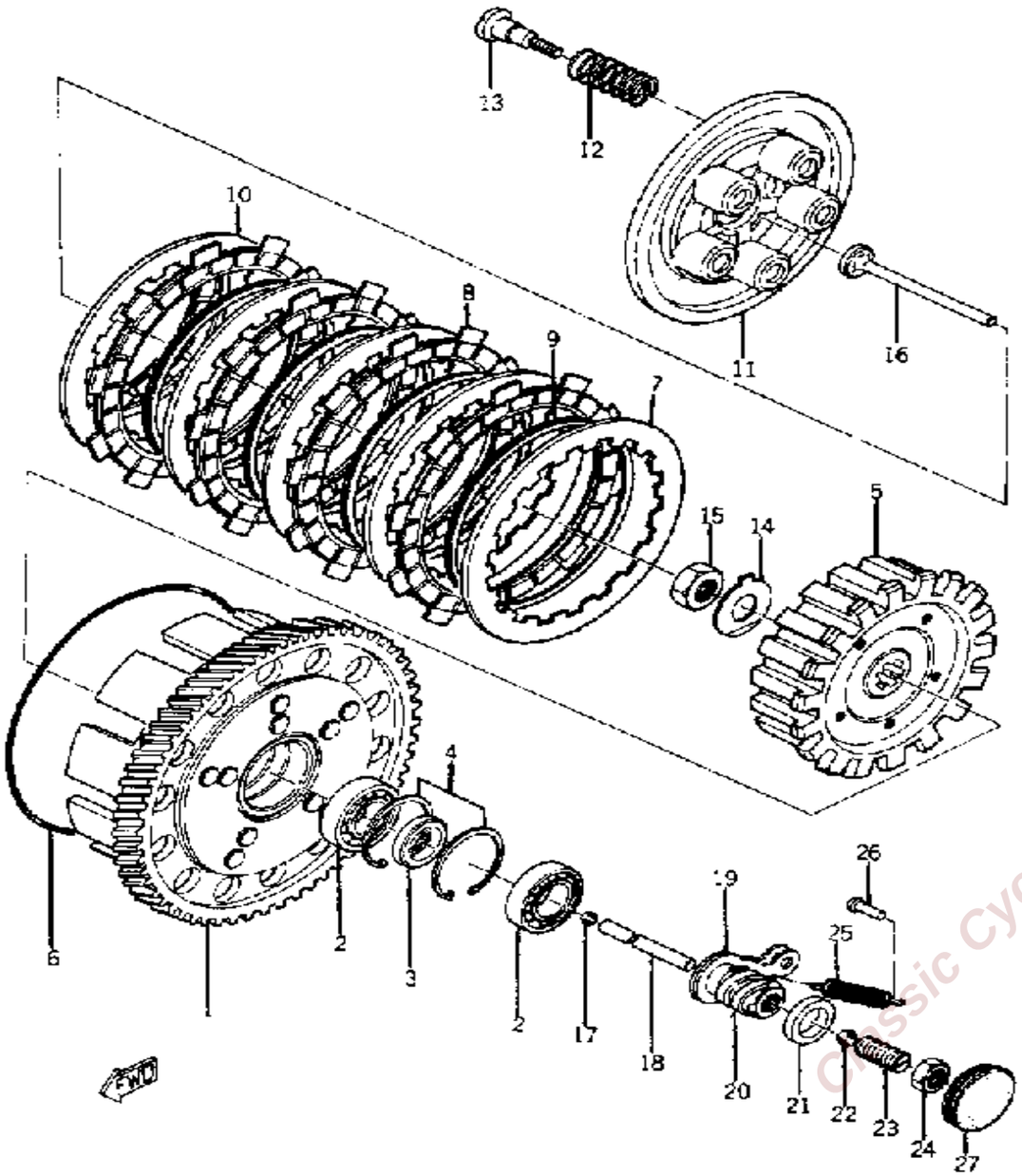

Ref. No.	Part Number	Description	Qty	Remarks
1	(137-16301-00-00)	CLUTCH ASSEMBLY	1	
	(227-16150-01-00)	PRI DRVN GEAR	1	
2	93306-00302-00	. BEARING (B6003C3)	2	
3	(137-16181-00-00)	SPACER 1	1	
4	(93420-35004-00)	CIRCLIP, R-TYPE	2	
5	(137-16371-01-00)	BOSS, CLUTCH	1	
6	93211-08068-00	. O-RING (1) (3.5-108)	1	
7	137-16325-00-00	. PLATE, CLUTCH 2	1	
8	132-16321-01-00	. PLATE, FRICTION	4	
9	137-16367-00-00	. RING, CUSHION	4	
10	137-16324-00-00	. PLATE, CLUTCH 1	4	
11	132-16351-00-00	. PLATE, PRESSURE 1	1	
12	90501-20124-00	. SPRING, COMPRESSION (137-16333-00)	5	
13	(90149-05147-00)	SCREW, SPECL SHAPE	5	
14	90208-12015-00	WASHER, CONICAL SPR	1	
15	90170-12060-00	NUT	1	
16	137-16356-00-00	ROD, PUSH 1	1	
17	93501-04011-00	BALL	1	
18	137-16357-00-00	ROD, PUSH 2 (2)	1	
19	(137-16342-00-00)	LEVER, PUSH	1	
20	(137-16341-00-00)	SCREW, PUSH	1	
21	93108-15001-00	OIL SEAL, OSO-TYPE	1	
22	93505-16006-00	BALL	1	
23	(90113-10026-00)	BOLT, SET	1	
24	95303-10600-00	NUT	1	
25	90506-10020-00	SPRING, TENSION (137-16345-00)	1	
26	132-16346-00-00	HOOK, SPRING	1	

CONTINUED ON NEXT FRAME ➤

Classic Cycles Technical Resources

CLUTCH

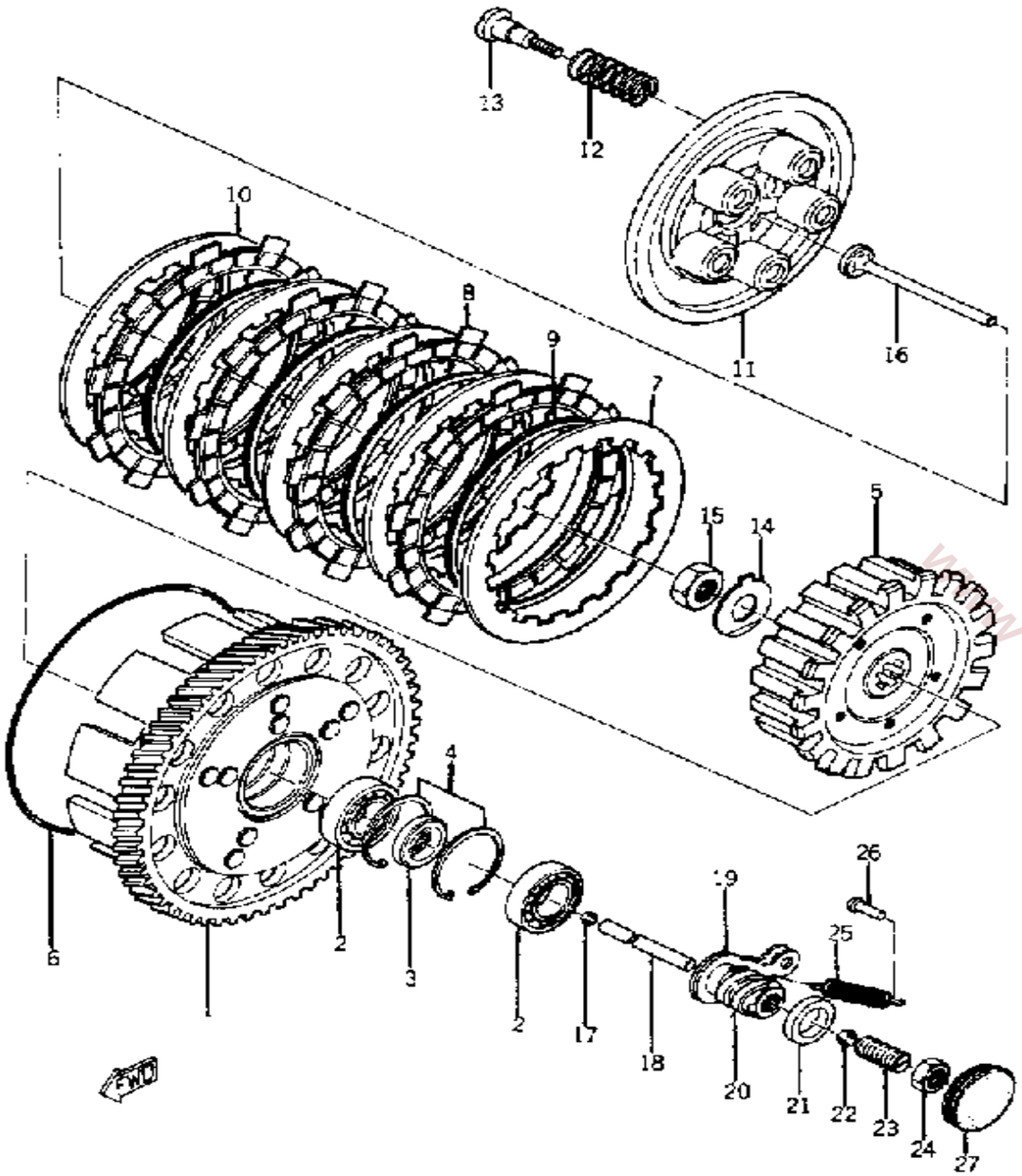

Ref. No.	Part Number	Description	Qty	Remarks
27	(137-15417-00-00)	COVER, CAP	1	

www.ClassicCycles.org

TRANSMISSION

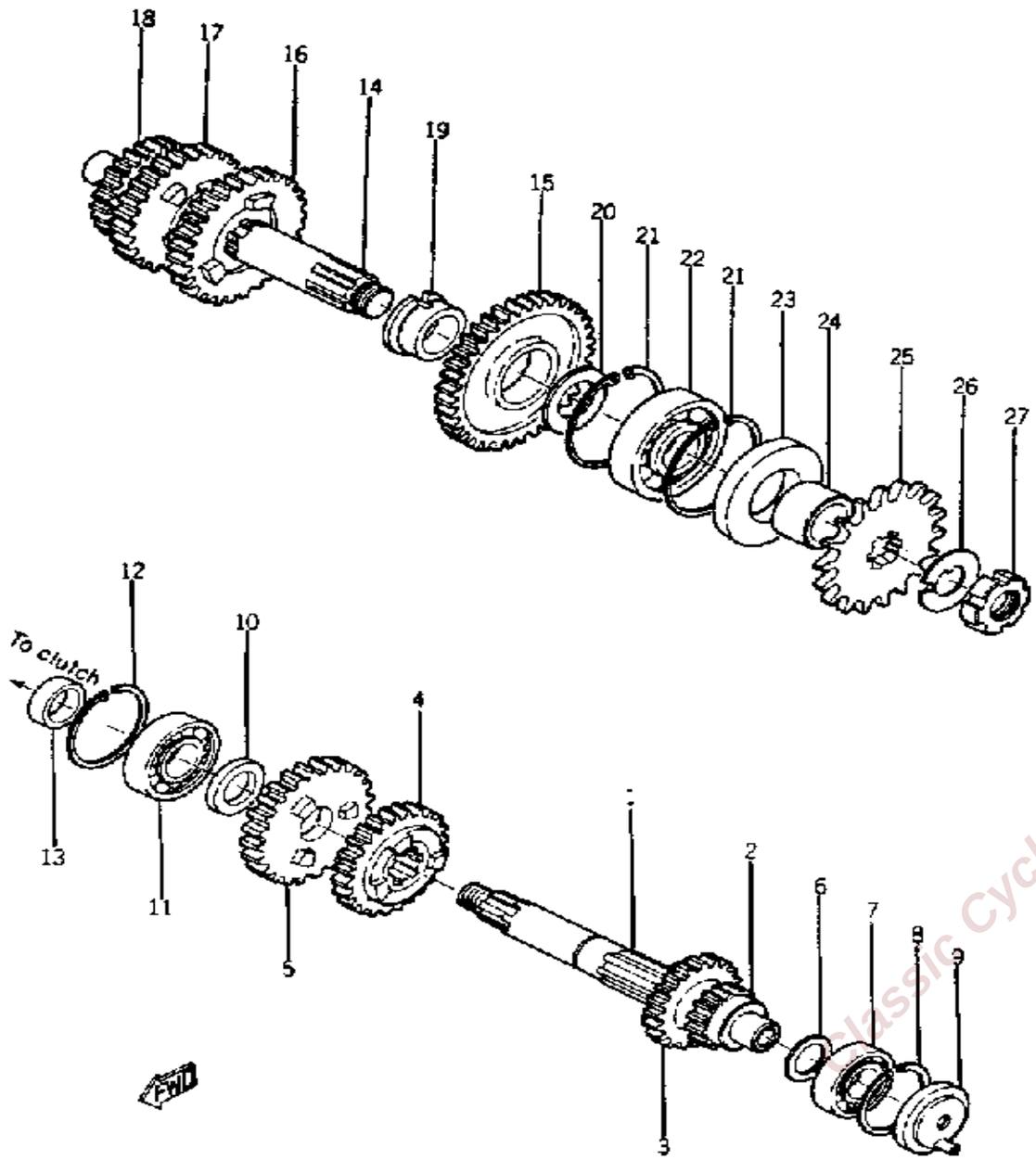

Ref. No.	Part Number	Description	Qty	Remarks
1	(137-17401-01-00)	MAIN AXLE ASSEMBLY	1	
	(137-17411-01-00)	. AXLE, MAIN	1	
2	(137-17111-00-00)	. GEAR, 1ST PINION	1	
	(137-17402-00-00)	DRIVE AXLE ASSEMBLY	1	
3	(140-17121-00-00)	. GEAR, 2ND PINION 0 1	1	
	(140-17121-00-00)	. GEAR, 2ND PINION 0 1	1	151~
4	(140-17131-00-00)	. GEAR, 3RD PINION 0 1	1	
	(140-17131-00-00)	. GEAR, 3RD PINION 0 1	1	151~
5	(137-17141-01-00)	. GEAR, 4TH PINION 0 1	1	
	(137-17141-01-00)	. GEAR, 4TH PINION 0 1	1	151~
6	137-17417-00-06	SHIM 1 (0.6T)	1	
7	93306-20211-00	BEARING (6202SH2-C3)	1	
8	99009-35500-00	CIRCLIP	1	
9	(137-15389-00-00)	SEAL, PUSH ROD	1	
10	(90387-17129-00)	COLLAR	1	
11	93306-20310-00	BEARING (B6203DU)	1	273~
	93313-41704-00	BEARING, CYLINDER.# 3	1	
12	93420-40064-00	CIRCLIP, R-TYPE	1	
	93420-40064-00	CIRCLIP, R-TYPE	1	273~
13	(90560-17031-00)	SPACER 0 1	1	273~
14	(137-17421-00-00)	AXLE, DRIVE	1	
15	(227-17211-00-00)	GEAR, 1ST WHEEL	1	
16	(140-17221-00-00)	GEAR, 2ND WHEEL 0 1	1	
	(140-17221-00-00)	GEAR, 2ND WHEEL 0 1	1	151~
17	(140-17231-00-00)	GEAR, 3RD WHEEL 0 1	1	
	(140-17231-00-00)	GEAR, 3RD WHEEL 0 1	1	151~
18	(137-17241-00-00)	GEAR, 4TH WHEEL	1	
19	(137-17258-00-00)	COLLAR 1	1	
20	137-17427-00-06	SHIM 1	1	

CONTINUED ON NEXT FRAME ➤

Classic Cycles Technical Resources

TRANSMISSION

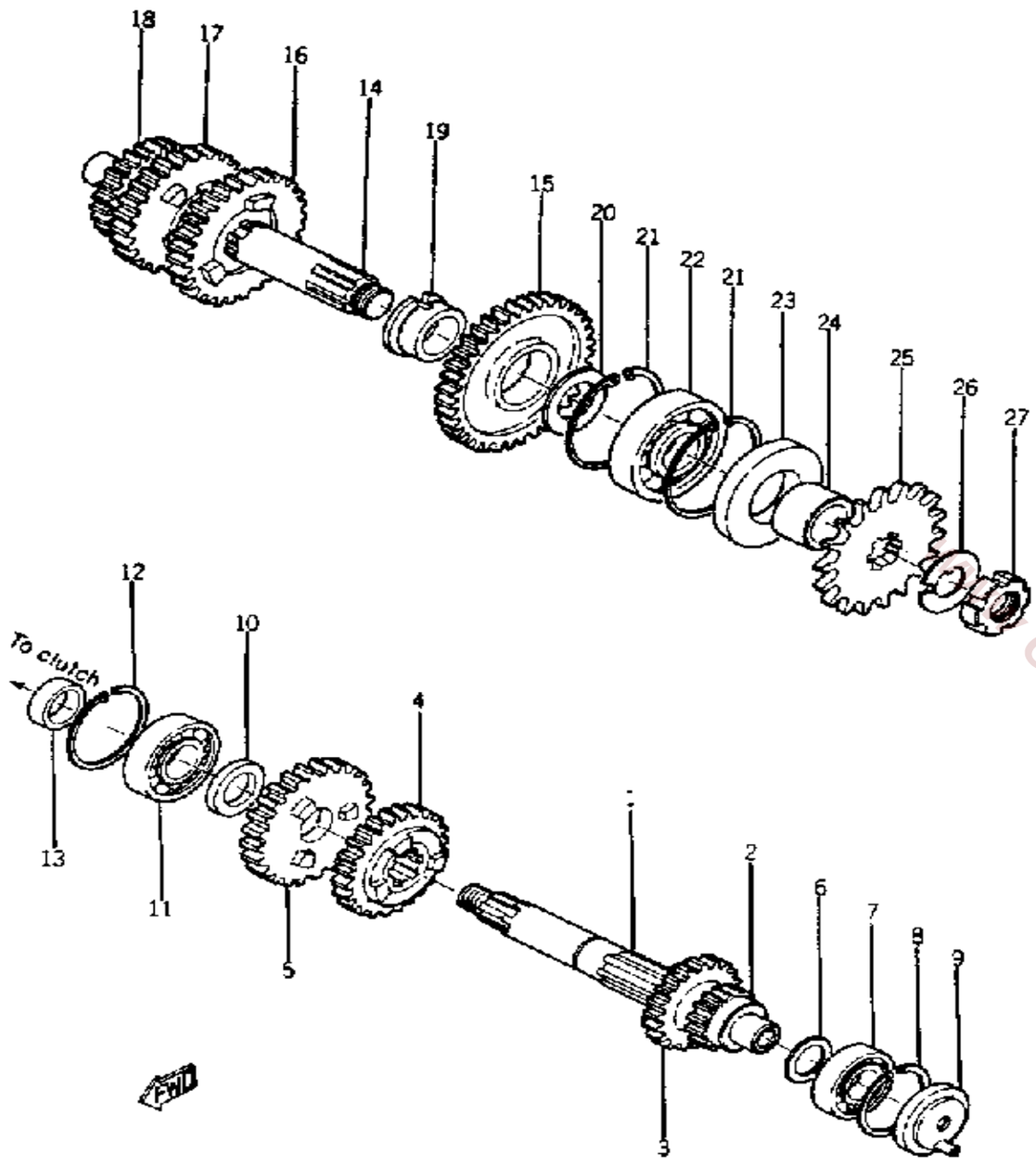

Ref. No.	Part Number	Description	Qty	Remarks
21	93450-52010-00	CIRCLIP	2	
22	93306-30421-00	BEARING (B6304C3)	1	
23	93102-28023-00	OIL SEAL	1	
24	90387-20346-00	COLLAR (102-17462-00)	1	
25	93822-14037-00	SPROCKET, DRIVE (14T)	1	
	93822-15065-00	SPROCKET, DRIVE 15T (1741746150)	1	
	93822-16093-00	SPROCKET, DRIVE	1	
26	90215-16020-00	WASHER, LOCK	1	
27	90179-16018-00	NUT	1	

ClassicCycles.org

SHIFTER 1

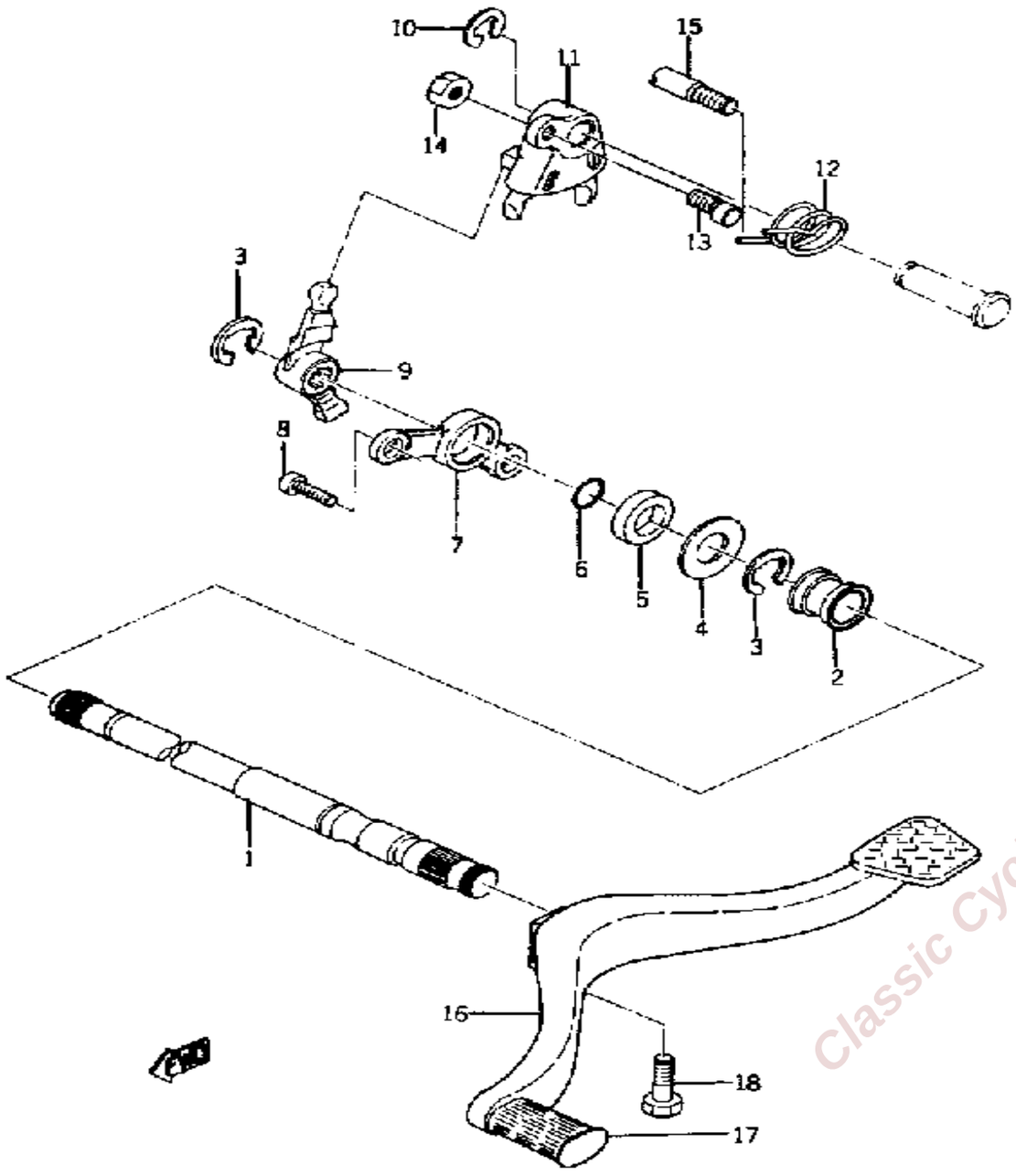

Ref. No.	Part Number	Description	Qty	Remarks
1	(137-18121-01-00)	LEVER, SHIFT 1	1	
	(137-18125-00-00)	SHAFT, SHIFT	1	
2	(137-18125-00-00)	SHAFT, SHIFT	1	
3	93430-10015-00	CIRCLIP	2	
4	90201-12575-00	WASHER, PLATE	1	
5	93101-12004-00	OIL SEAL	1	
6	93210-09008-00	O-RING	1	
7	(137-18128-00-00)	BRACKET	1	
8	98580-06018-00	SCREW, PAN HEAD	2	
9	(137-18121-01-00)	LEVER, SHIFT 1	1	
10	93430-08007-00	CIRCLIP, E-TYPE	2	
11	(137-18180-01-00)	PAWL HOLDER ASSEMBLY	1	
12	(90508-30050-00)	SPRING, TORSION	1	
13	(90149-06015-00)	SCREW, SPEC''L SHAPE	1	
14	95380-06600-00	NUT, HEXAGON	1	
15	90149-06016-00	SCREW, SPEC''L SHAPE (137-18127-00)	1	
16	(137-18111-61-93)	PEDAL, SHIFT	1	
17	132-18113-01-00	COVER, SHIFT PEDAL	1	
18	97011-06020-00	BOLT	1	

Classic Cycles Technical Resources

SHIFTER 2

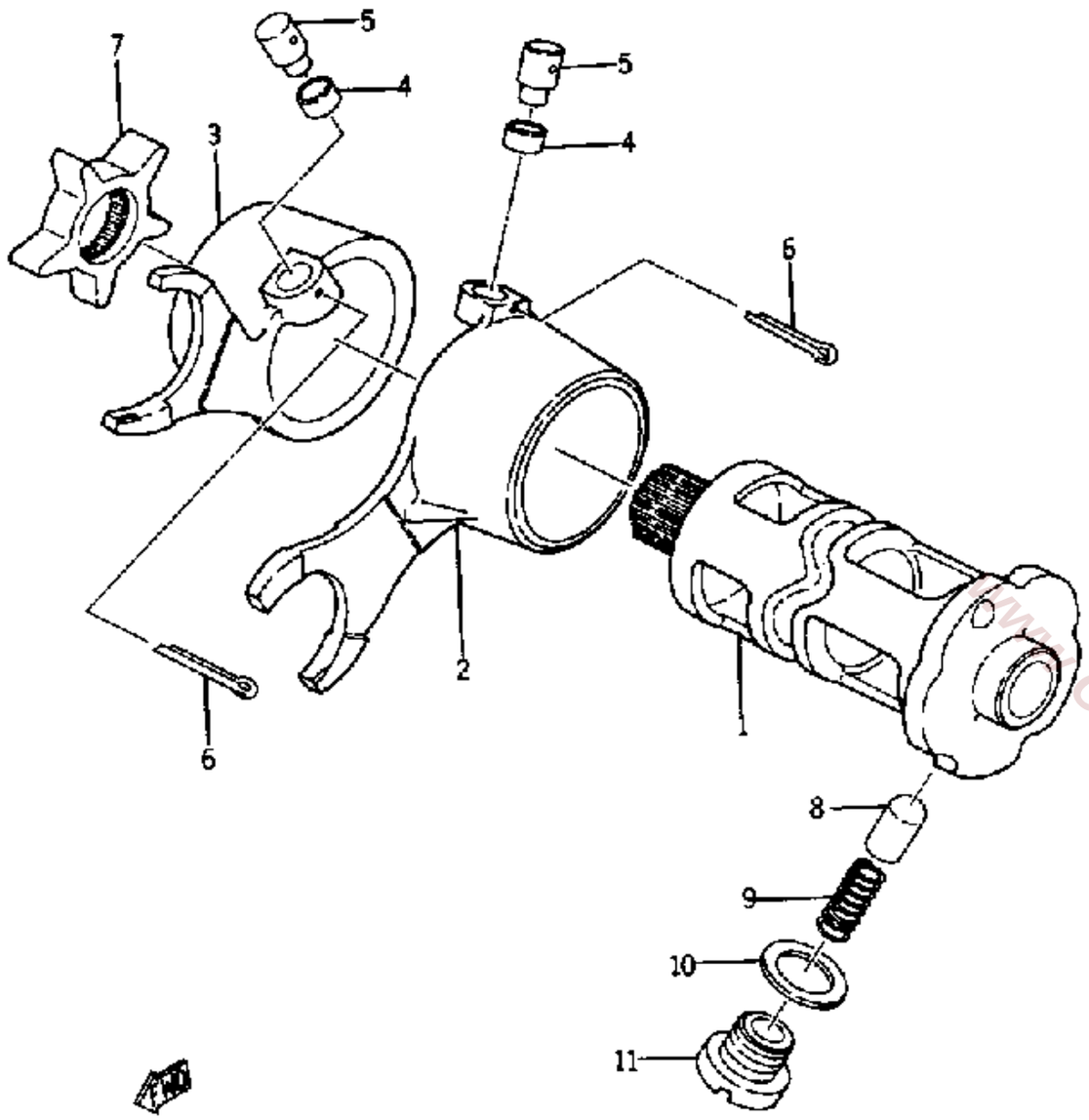

Ref. No.	Part Number	Description	Qty	Remarks
1	(137-18541-60-00)	CAM, SHIFT	1	
	137-18500-60-00	NO LONGER AVAILABLE	1	
2	(140-18512-00-00)	FORK, SHIFT 2	1	
3	(140-18511-00-00)	FORK, SHIFT 1	1	
4	136-18551-00-00	. ROLLER, CAM FOLWR	2	
5	(90249-05035-00)	PIN, SPEC''L SHAPE	2	
6	91401-25020-00	. PIN, COTTER	2	
7	(137-18185-60-00)	SEGMENT	1	
8	137-18547-00-00	STOPPER, CAM	1	
9	90501-09050-00	SPRING, COMPRESSION (137-18557-00)	1	
10	90430-12207-00	GASKET	1	
11	90109-12198-00	BOLT	1	

www.ClassicCycles.org

KICK

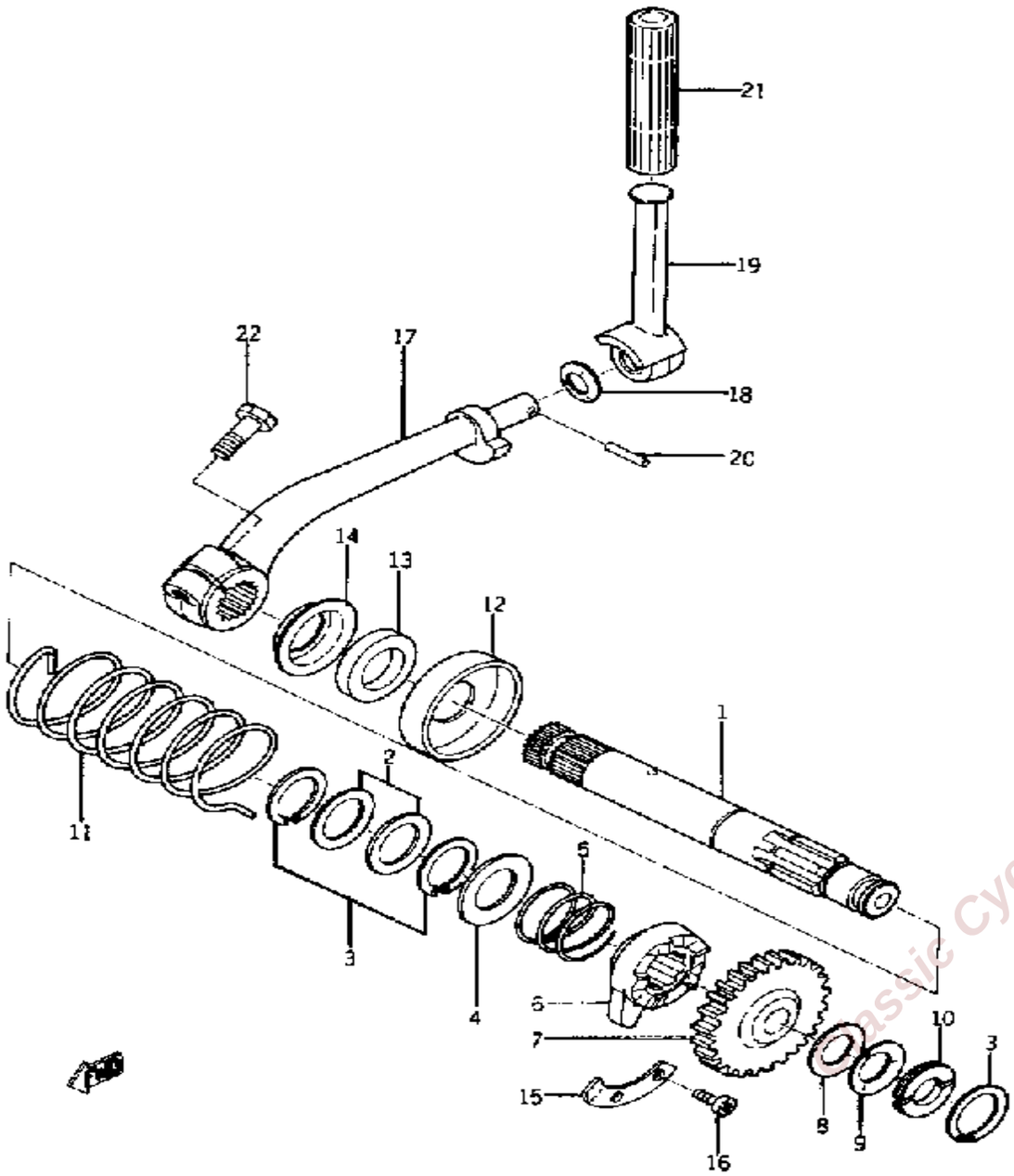

Ref. No.	Part Number	Description	Qty	Remarks
1	(037-15641-00-00)	GEAR, KICK	1	
	(137-15661-00-00)	AXLE, KICK	1	
2	90201-20275-00	WASHER, PLATE	2	
3	99009-20400-00	CIRCLIP	3	
4	(137-15676-00-00)	COVER, SPRING	1	
5	(90501-14096-00)	SPRING, COMPRESSION	1	
6	(137-15671-01-00)	WHEEL, RATCHET	1	
7	(137-15641-00-00)	GEAR, KICK	1	
8	(137-15644-00-00)	SHIM	1	
9	90206-15021-00	WASHER, WAVE	1	
10	137-15654-00-00	HOLDER, KICK GEAR	2	
11	(90508-35071-00)	SPRING, TORSION	1	
12	(227-15664-00-00)	GUIDE, SPRING	1	
13	93101-20048-00	OIL SEAL	1	
14	(146-15662-00-00)	COVER, KICK AXLE	1	
15	(137-15674-00-00)	GUIDE, RATCHET WHL	1	
16	(92503-05012-00)	SCREW, PAN HEAD	2	
18	90206-10014-00	. WASHER, WAVE	1	
19	(214-15612-09-00)	LEVER, KICK	1	
20	(93604-18017-00)	PIN, DOWEL	1	
21	156-15618-01-00	COVER, KICK LEVER	1	
22	97011-06025-00	BOLT (97001-06025)	1	

Classic Cycles Technical Resources

CARBURETOR

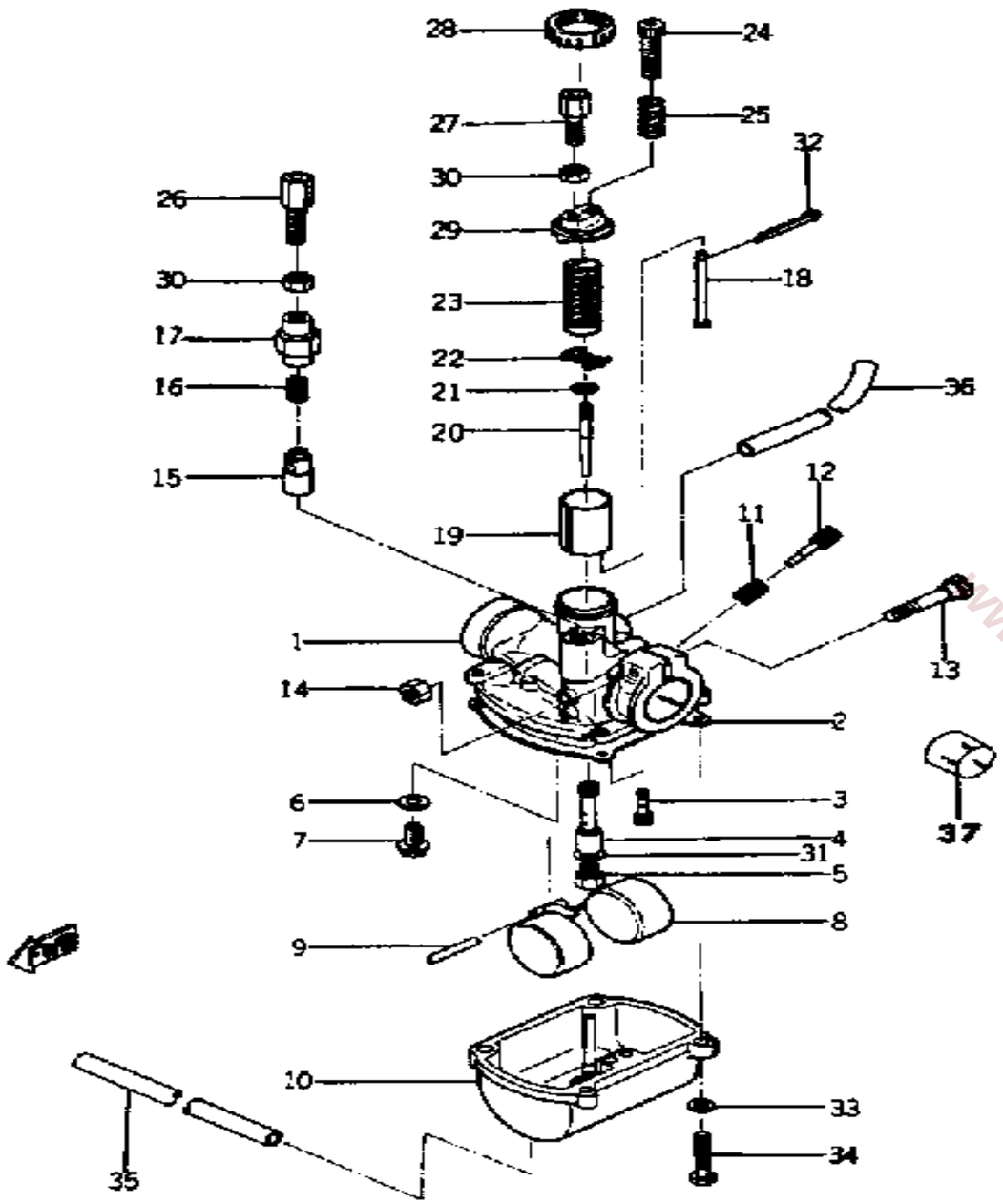

Ref. No.	Part Number	Description	Qty	Remarks
1	(227-14101-01-00)	CARBURETOR ASSEMBLY 1 .	1	
	137-14143-40-A1	. JET, MAIN #200 (200)	1	
2	137-14143-42-A1	. JET, MAIN #210 (210)	1	
	137-14184-00-00	. GASKET, FLOAT CHMBR . . .	1	
3	(127-14142-30-00)	JET, PILOT # 0	1	
	137-14143-44-A1	. JET, MAIN #220 (220)	1	
4	(137-14141-30-00)	NOZZLE, MAIN	1	
	137-14143-46-A1	. JET, MAIN (#230)	1	
5	137-14143-38-A0	. JET, MAIN #190 (190)	1	
6	127-14195-00-00	. WASHER, NEEDLE VALVE . .	1	
7	137-14190-20-00	. NEEDLE VALVE ASSEMBLY .	1	
8	(137-14185-00-00)	FLOAT	1	
9	127-14186-00-00	PIN, FLOAT	1	
10	(137-14181-00-00)	BODY, FLOAT CHMBR 1	1	
11	137-14134-00-00	. SPRING, AIR ADJUSTING . . .	1	
12	137-14123-00-00	. SCREW, AIR ADJUSTING . . .	1	
13	(137-14125-00-00)	SCREW, BODY FITTING	1	
14	(137-14164-00-00)	NUT, HOLDING	1	
15	58E-14171-00-00	. PLUNGER, STARTER	1	
16	(137-14135-00-00)	SPRING, PLUNGER	1	
17	127-14174-00-00	. CAP, PLUNGER	1	
18	(137-14114-00-00)	BAR, THROTTLE	1	
19	(137-14112-25-00)	VALVE, THROTTLE 1	1	
20	(166-14116-06-00)	NEEDLE	1	
21	137-14137-00-00	. CLIP	1	
22	137-14136-00-00	. SEAT, SPRING	1	
23	(137-14131-00-00)	SPRING, THRTL VALVE	1	
24	(127-14121-00-00)	SCREW, THRTL STOP	1	
25	137-14133-00-00	. SPRING, THROTTLE STOP . .	1	

CONTINUED ON NEXT FRAME ➤

www.ClassicCycles.org

CARBURETOR

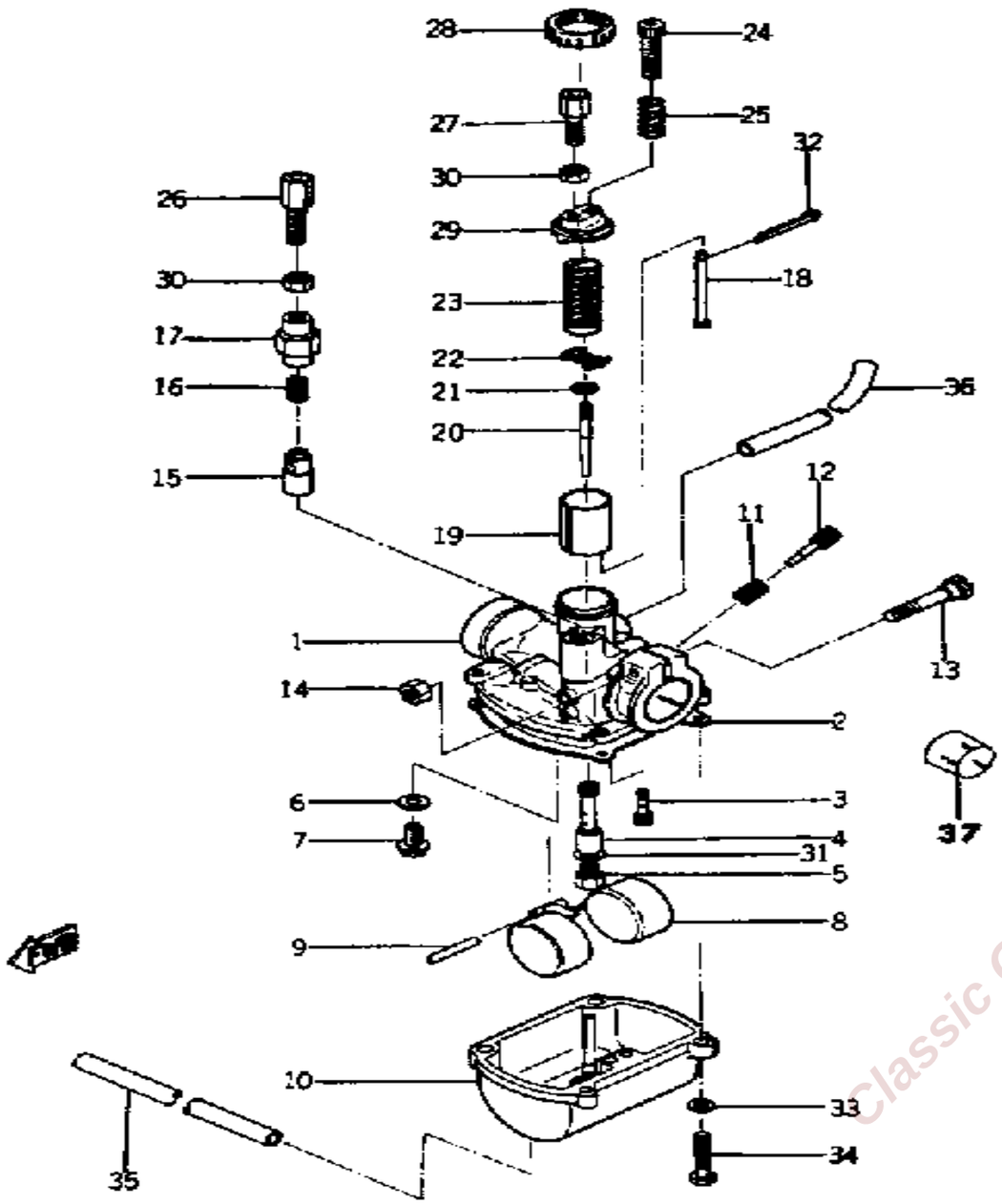

Ref. No.	Part Number	Description	Qty	Remarks
26	12G-14106-00-00	. CBLE ADJUST SCREW SET .	1	
27	12G-14106-00-00	. CBLE ADJUST SCREW SET .	1	
28	(137-14168-00-00)	CAP, MIXING CHAMBER	1	
29	(137-14158-00-00)	TOP, MIXING CHAMBER	1	
30	(127-14181-00-00)	BODY, FLOAT CHMBR 1	2	
31	137-14153-00-00	. WASHER, MAIN JET	1	
32	91401-10015-00	. PIN, COTTER	1	
33	92901-04100-00	. WASHER, SPRING	4	
34	92503-04015-00	. SCREW, PAN HEAD	4	
35	(137-14196-00-00)	PIPE, OVERFLOW	1	
36	90445-05013-00	HOSE (137-14197-00)	1	
37	(137-14156-00-00)	UNAVAILABLE IN PRICE BOOK	1	N/A

Classic Cycles Technical Resources

AIR CLEANER - MUFFLER

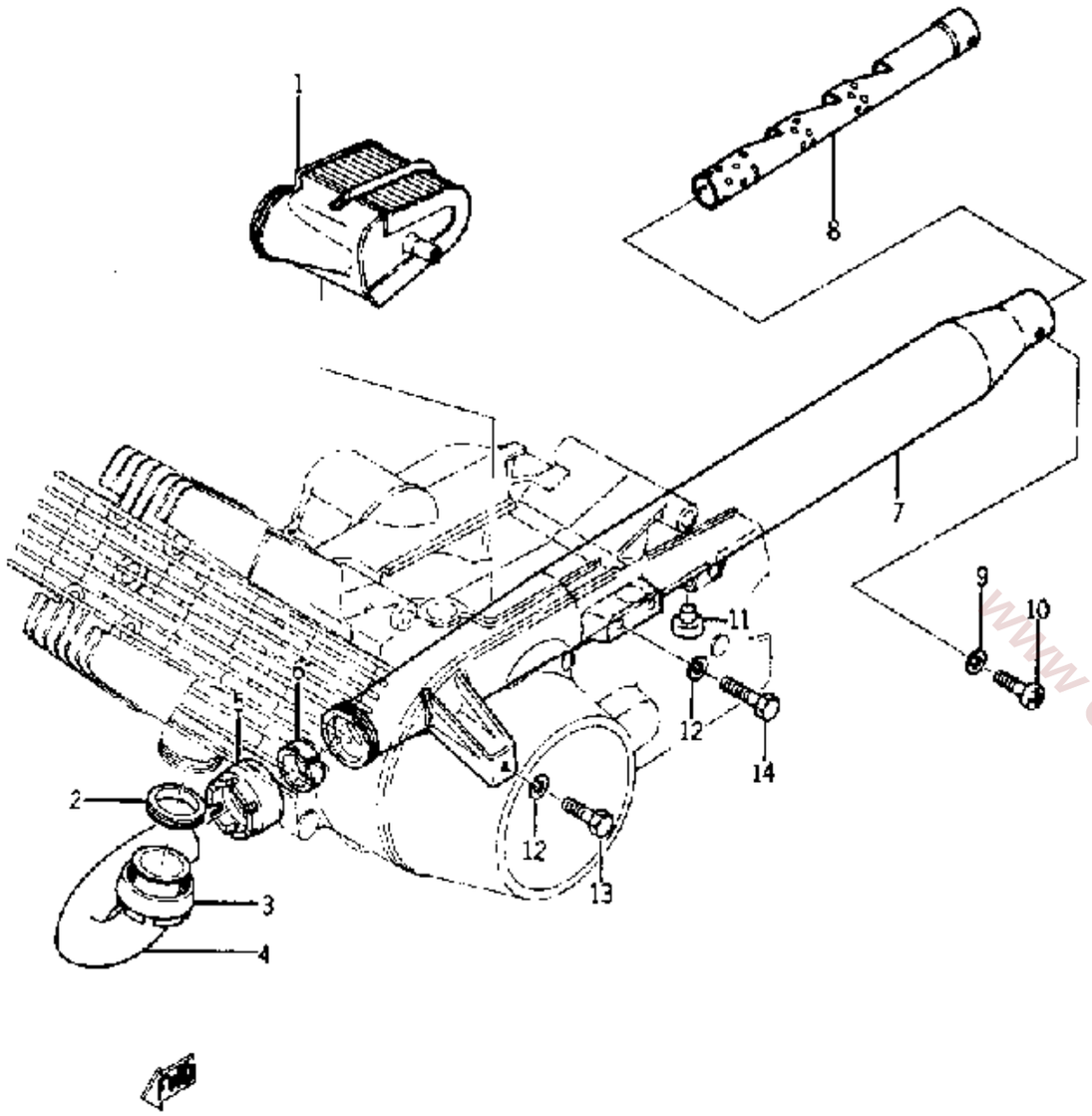

Ref. No.	Part Number	Description	Qty	Remarks
1	(137-14451-00-00)	ELEMENT, AIR CLNR	1	
	(137-14710-00-00)	MUFFLER ASSEMBLY L 0 1	1	001~
2	152-14613-00-00	GASKET, EXST PIPE	1	
3	(157-14612-00-00)	NUT, RING	1	
4	(137-14611-00-00)	PIPE, EXHAUST L	1	
5	(137-14713-00-00)	NUT, MUFFLER JOINT	1	
6	(137-14714-60-00)	GASKET, MUFFLER	1	
7	(137-14710-00-00)	MUFFLER ASSEMBLY L 0 1	1	
8	(156-14753-00-00)	SILENCER, EXHAUST	1	
9	92990-05100-00	WASHER, SPRING	1	
10	92503-05008-00	SCREW, PAN HEAD	1	
11	1M3-27114-00-00	STOPPER, MAIN STAND	1	
12	92990-08100-00	WASHER, SPRING	3	
13	97313-08018-00	BOLT, HEXAGON	1	
14	97013-08025-00	BOLT	2	

www.ClassicCycles.org

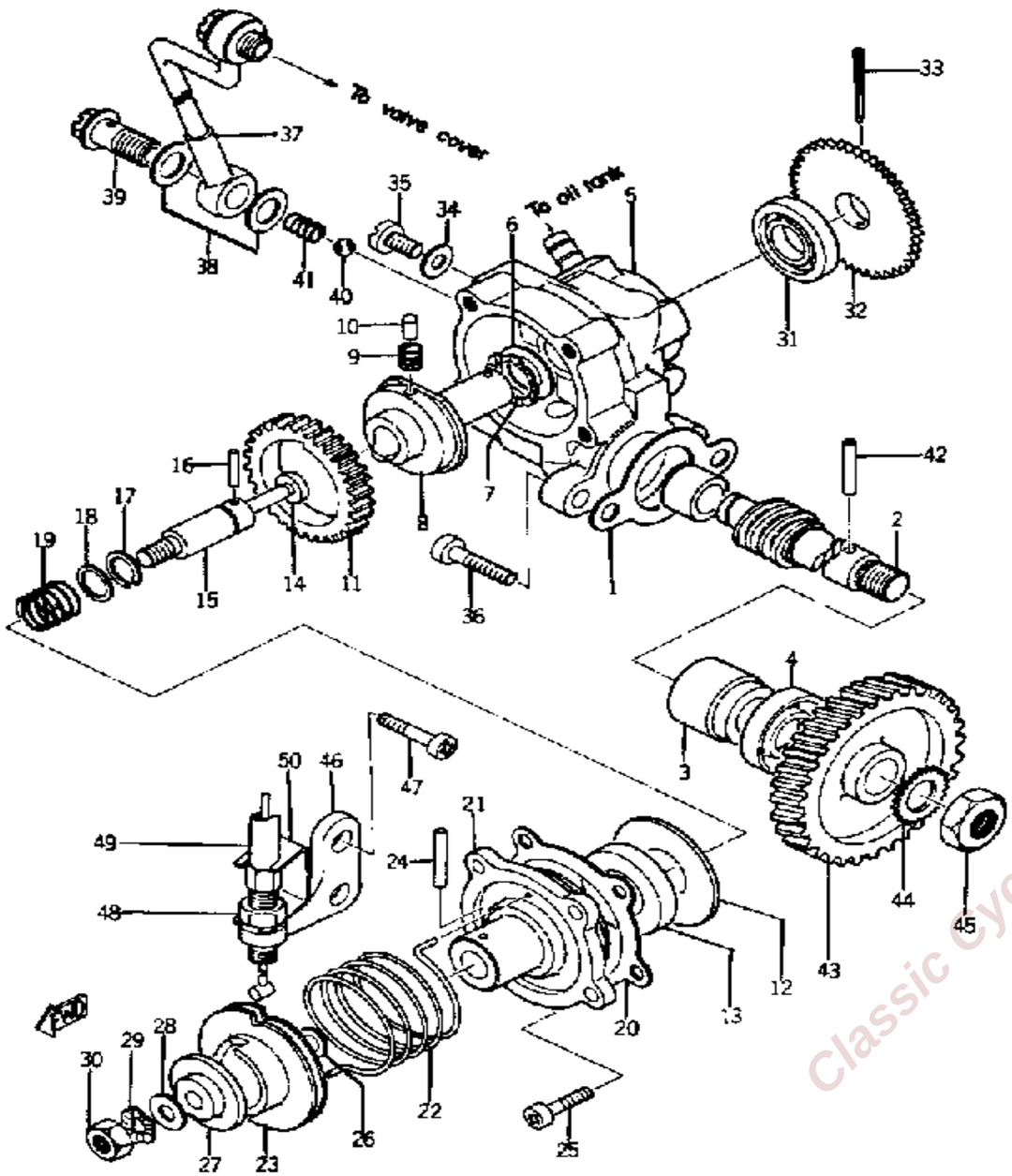

OIL PUMP

Ref. No.	Part Number	Description	Qty	Remarks
1	(137-13101-02-00)	OIL PUMP ASSEMBLY	1	
	3MT-13116-00-00	GASKET, PUMP CASE	1	
2	(137-13175-00-00)	SHAFT, WORM	1	
3	1E7-13176-00-00	METAL, WRM SHAF OTR	1	
4	93101-10002-00	OIL SEAL	1	
6	137-13148-00-00	. PLATE, CAM THRUST	1	
7	90206-11016-00	. WASHER, WAVE	1	
9	(90501-02016-00)	SPRING, COMPRESSION	2	
10	(93602-04029-00)	PIN, DOWEL	2	
11	(137-13124-00-00)	GEAR, WORM WHEEL	1	
12	(137-13127-00-00)	PLATE, WORM WHEEL	1	
13	93104-14059-00	. OIL SEAL	1	
14	93104-04001-00	. OIL SEAL, SO-TYPE	1	
16	93603-12030-00	. PIN, DOWEL	1	
17	93440-08001-00	. CIRCLIP, OUTER	1	
18	(137-13134-00-00)	SEAT, SPRING	1	
19	(137-13135-00-00)	SPRING, PLNGR RTRN	1	
20	137-13142-00-00	. GASKET	1	
22	(90508-10216-00)	SPRING, TORSION	1	
23	(137-13144-00-00)	PULLEY, ADJUSTING	1	
24	91608-20010-00	. PIN, SPRING	1	
25	92501-04010-00	. SCREW, PAN HEAD	4	
26	137-13137-00-10	. SHIM, PLUNGER (1.0T)	1	
27	137-13138-01-00	. PLATE, ADJUSTING	1	
28	137-13137-00-10	. SHIM, PLUNGER (1.0T)	2	
29	92990-05100-00	. WASHER, SPRING	1	
30	(137-13139-00-00)	NUT	1	
31	93101-10090-00	. OIL SEAL	1	
32	(137-13128-00-00)	PLATE, STARTER	1	

Classic Cycles Technical Resources

CONTINUED ON NEXT FRAME ➤

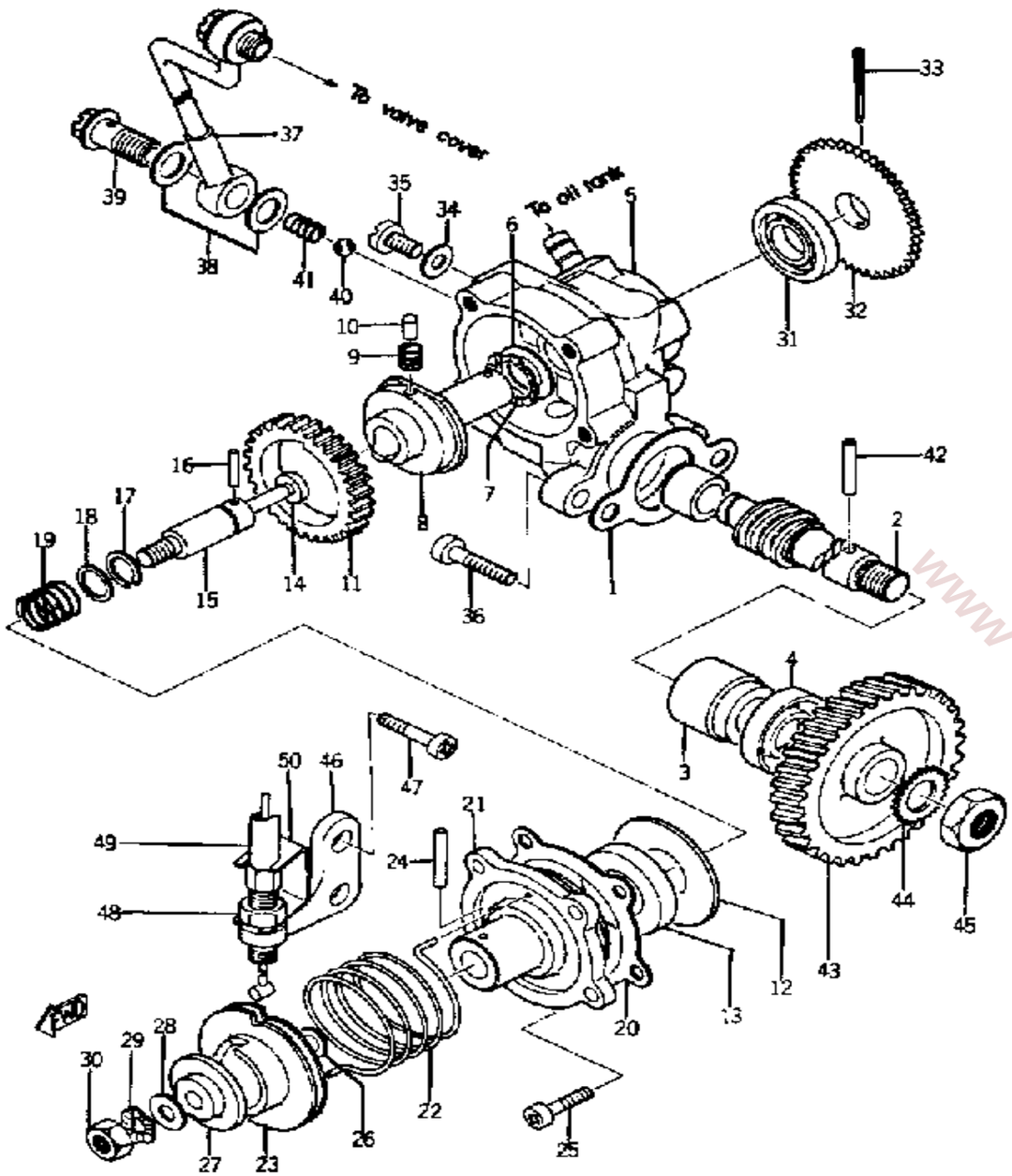

OIL PUMP

Ref. No.	Part Number	Description	Qty	Remarks
33	91401-12018-00	. PIN, COTTER	1	
34	90430-04004-00	GASKET	1	
35	(164-81245-20-00)	SCREW, PAN HEAD	1	
36	98580-05016-00	SCREW, PAN HEAD	2	
37	(137-13161-00-00)	PIPE, DELIVERY 1	1	
38	90430-06011-00	GASKET (137-13167-00)	4	
39	90401-06001-00	BOLT, UNION	2	
40	93505-32002-00	BALL	1	
41	(90501-02017-00)	SPRING, COMPRESSION	1	
42	93603-22028-00	PIN, DOWEL	1	
43	(137-13178-00-00)	GEAR, PUMP DRIVE	1	
44	92901-08400-00	WASHER, EX.TOOTH	1	
45	95303-08700-00	NUT	1	
46	(137-26381-00-00)	HOLDER, ADJUSTING	1	
47	92503-05008-00	SCREW, PAN HEAD	2	
48	95380-06700-00	NUT	1	
49	90123-06002-00	BOLT	1	
50	(90468-06015-00)	CLIP	1	

www.ClassicCycles.org

GENERATOR

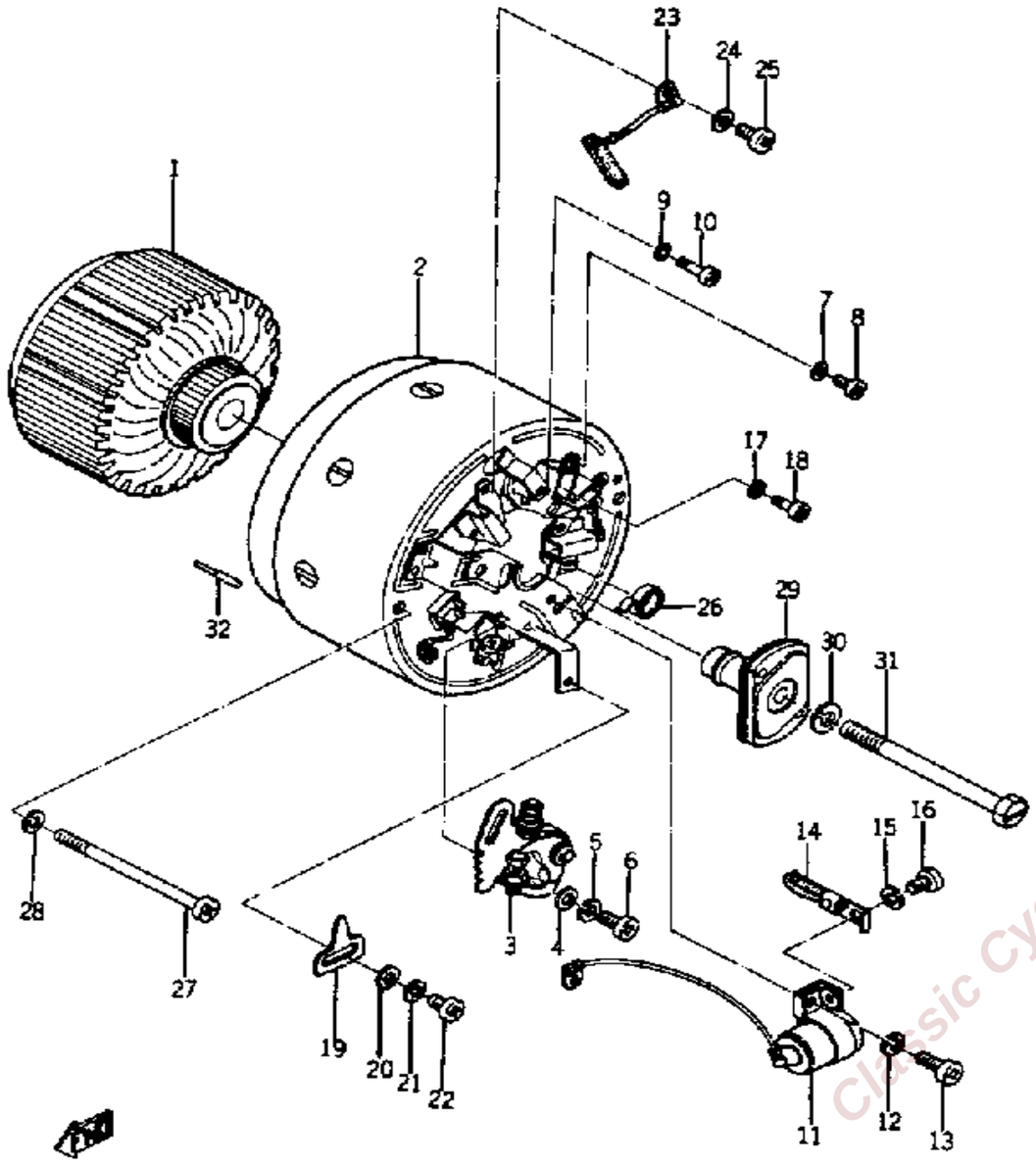

Ref. No.	Part Number	Description	Qty	Remarks
1	(141-81155-10-00)	ARMATURE	1	
	(227-81100-10-00)	STARTER GEN ASSEMBLY	1	
2	(137-81110-10-00)	STATOR ASSEMBLY	1	
3	132-81221-10-00	. . CONTACT BRKR ASSEMBLY	1	
4	92990-04200-00	. . WASHER, PLAIN	2	
5	92901-04100-00	. . WASHER, SPRING	2	
6	(92503-04008-00)	SCREW, PAN HEAD	2	
7	92990-03100-00	. . WASHER, SPRING	2	
8	(92501-03008-00)	SCREW, PAN HEAD	2	
9	92990-05100-00	. . WASHER, SPRING	1	
10	92503-05008-00	. . SCREW, PAN HEAD	1	
11	148-81126-90-00	. . CONDENSER 2	1	
12	92901-04100-00	. . WASHER, SPRING	2	
13	(92503-04008-00)	SCREW, PAN HEAD	2	
14	(141-81131-10-00)	LUBRICATOR	1	
15	92901-04100-00	. . WASHER, SPRING	1	
16	(92503-04008-00)	SCREW, PAN HEAD	1	
17	92901-04100-00	. . WASHER, SPRING	4	
18	(92503-04008-00)	SCREW, PAN HEAD	4	
19	(137-81132-10-00)	PLATE, TIMING	1	
20	92990-04200-00	. . WASHER, PLAIN	1	
21	92901-04100-00	. . WASHER, SPRING	1	
22	(92503-04008-00)	SCREW, PAN HEAD	1	
23	141-81111-10-00	. . BRUSH	4	
24	92901-04100-00	. . WASHER, SPRING	3	
25	(92503-04008-00)	SCREW, PAN HEAD	3	
26	141-81113-10-00	. . SPRING, BRUSH	4	
27	(136-81135-10-00)	SCREW, STATOR	2	
28	92990-05100-00	. WASHER, SPRING	2	

CONTINUED ON NEXT FRAME ➤

Classic Cycles Technical Resources

GENERATOR

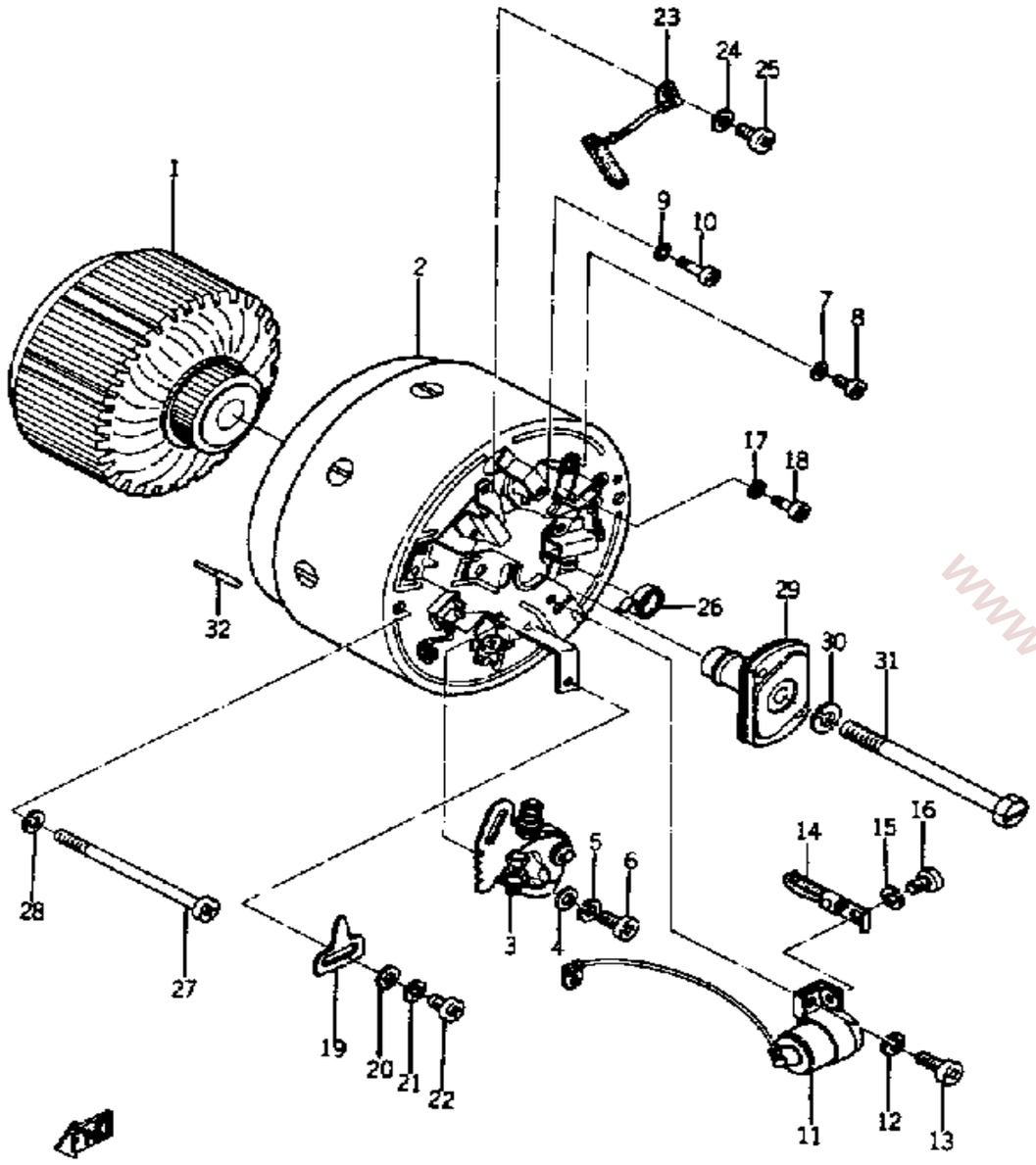

Ref. No.	Part Number	Description	Qty	Remarks
29	(141-81153-10-00)	GOVERNOR ASSEMBLY	1	
30	92990-08100-00	. WASHER, SPRING	1	
31	(141-81152-10-00)	BOLT	1	
32	93603-14026-00	PIN, DOWEL	1	

www.ClassicCycles.org

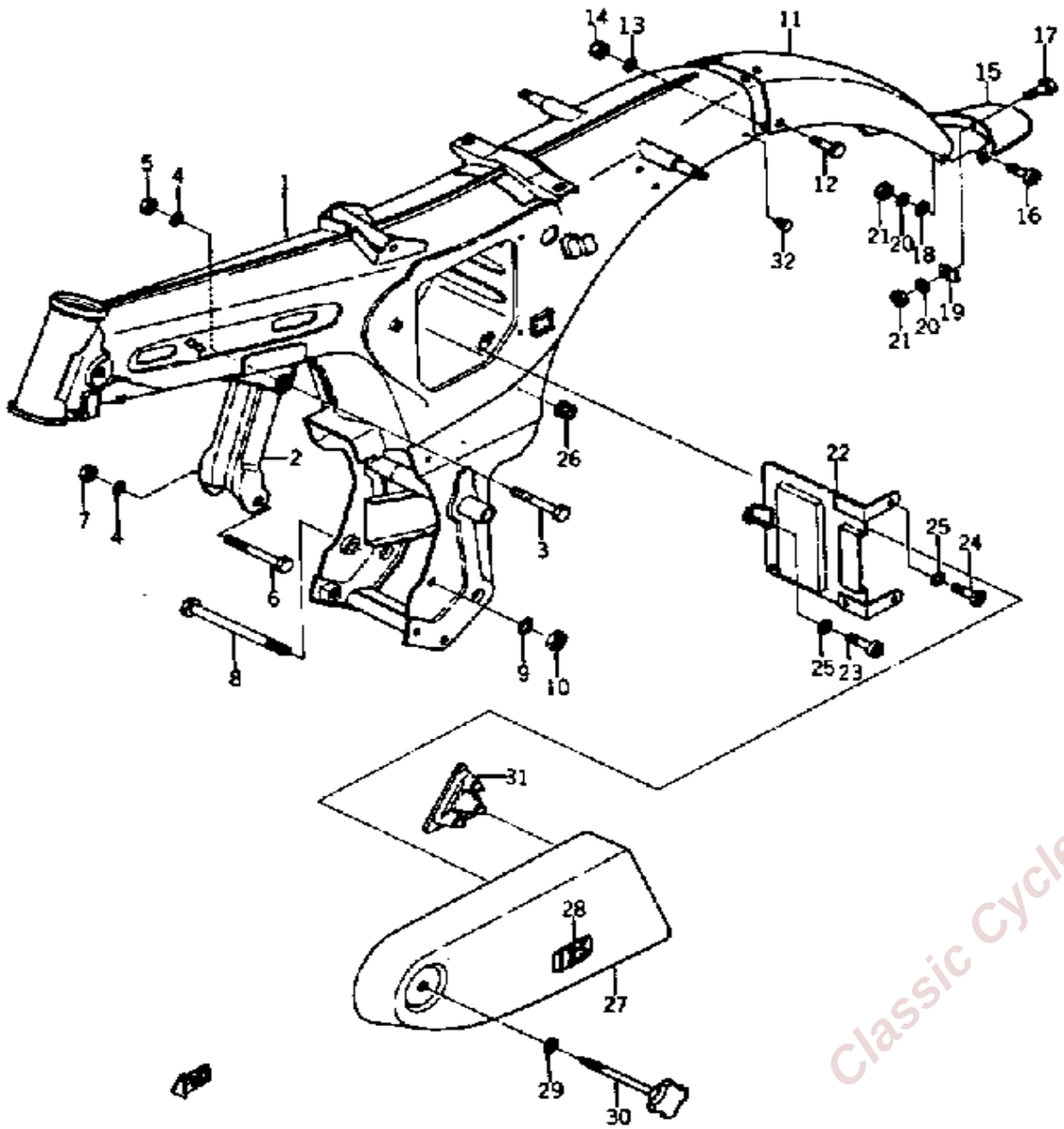

FRAME

Ref. No.	Part Number	Description	Qty	Remarks
3	97013-08060-00	BOLT (663)	1	
4	92990-08100-00	WASHER, SPRING	2	
5	95333-08600-00	NUT	1	
6	90105-08017-00	BOLT, WASHER BASEDBASED	1	
7	95333-08600-00	NUT	1	
8	95821-08130-00	BOLT, FLANGE (91101-08130)	2	
9	92990-08100-00	WASHER, SPRING	2	
10	95333-08600-00	NUT	2	
11	(137-21610-60-81)	FENDER, REAR	1	
12	97313-08016-00	BOLT, HEXAGON	2	
13	92990-08100-00	WASHER, SPRING	2	
14	95333-08600-00	NUT	2	
15	(137-21621-02-00)	FLAP	1	
16	98503-06014-00	SCREW, PAN HEAD (92501-06015)	2	
17	97013-06012-00	BOLT	1	
18	(137-21623-01-00)	PLATE, FLAP FTNG 1	2	
19	(137-21624-00-00)	PLATE, FLAP FTNG 2	1	
20	92995-06100-00	WASHER, SPRING	3	
21	95380-06600-00	NUT, HEXAGON	3	
22	(137-81915-00-00)	PLATE, REG FITTING	1	
23	98580-06010-00	SCREW, PAN HEAD	1	
24	98580-06012-00	SCREW, PAN HEAD (92501-06012-00)	2	
25	92995-06100-00	WASHER, SPRING	3	
26	(135-82595-00-00)	GROMMET	1	
27	(137-21710-00-33)	SIDE COVER ASSEMBLY 1	1	
28	(137-21786-00-00)	EMBLEM 6	1	
29	90202-33041-00	WASHER, PLATE (122-21715-00)	1	

CONTINUED ON NEXT FRAME ➤

Classic Cycles Technical Resources

FRAME

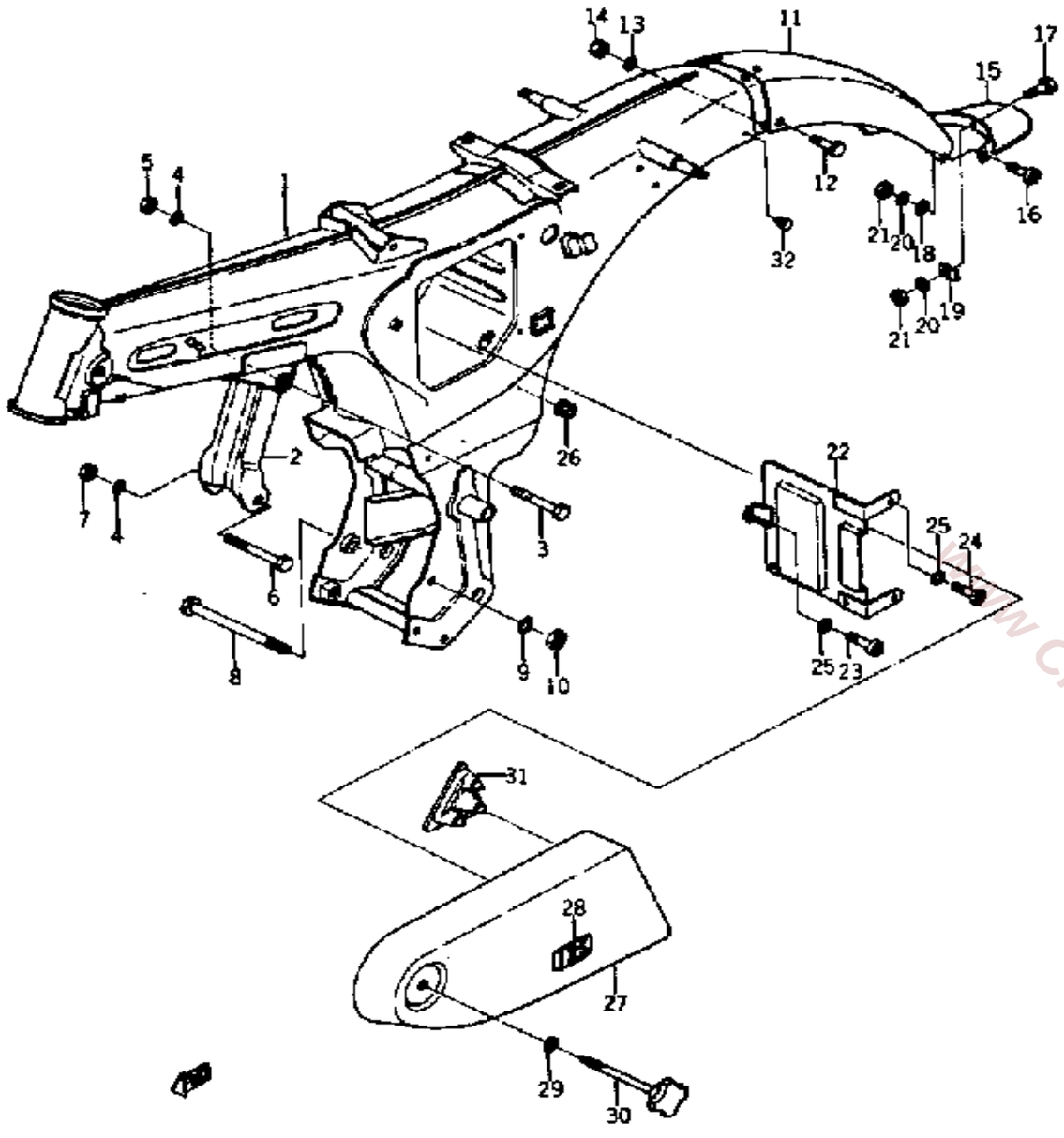

Ref. No.	Part Number	Description	Qty	Remarks
30	(137-21714-01-00)	KNOB, SIDE COVER 1	1	
31	(137-21719-00-00)	GROMMET	1	
32	(90338-09060-00)	PLUG, SPEC''L SHAPE	2	

www.ClassicCycles.org

REAR ARM - REAR CUSHION - CHAIN CASE

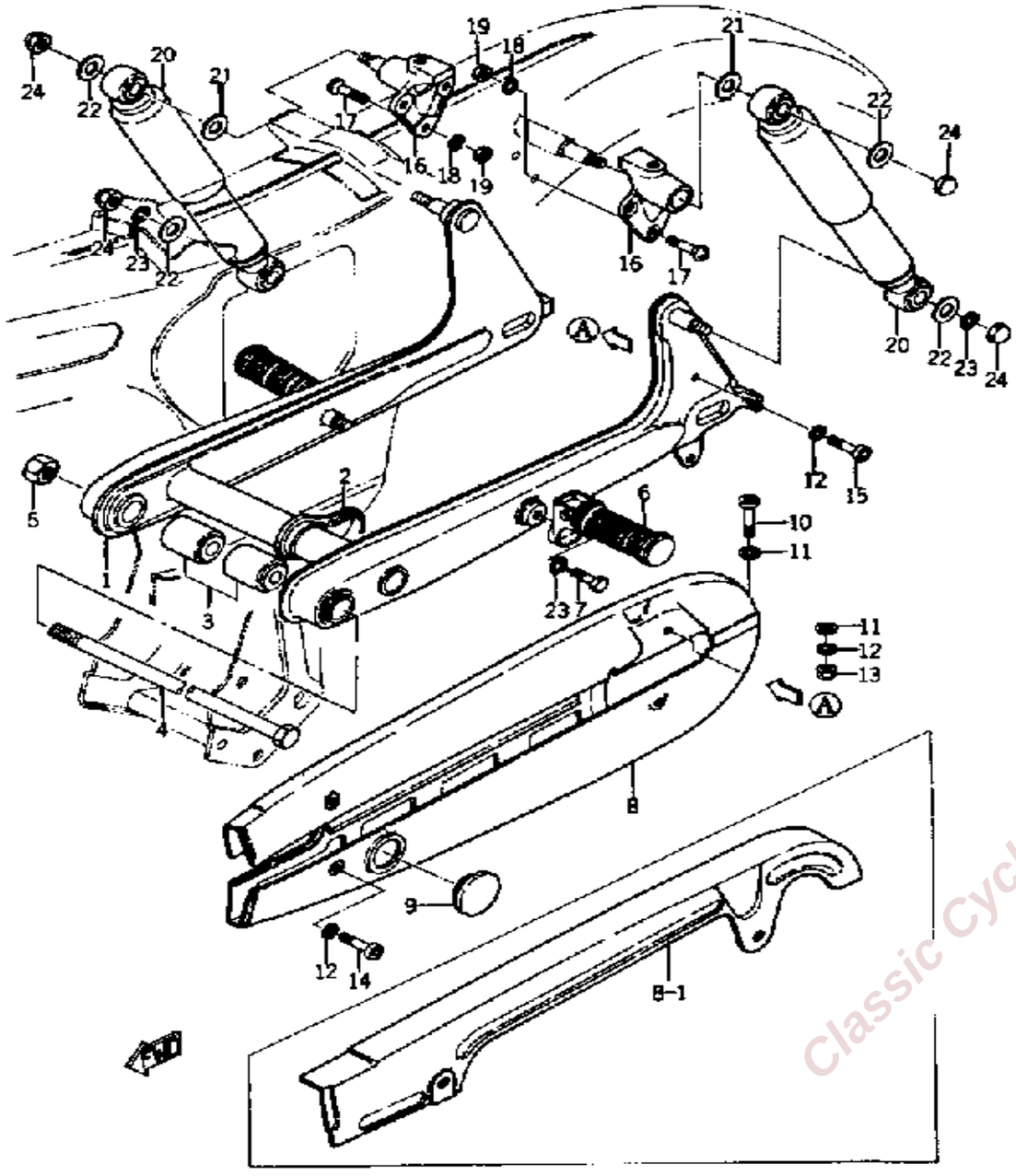

Ref. No.	Part Number	Description	Qty	Remarks
1	(137-22311-60-35)	CASE, CHAIN	1	
	120-27433-00-00	. COVER, REAR FOOTREST	2	
2	(137-22151-00-00)	SEAL, GUARD	1	
3	(137-22123-00-00)	BUSH 1	2	
4	(137-22141-00-00)	SHAFT, PIVOT	1	
5	95312-14600-00	NUT	1	
6	120-27430-00-00	RR FOOTREST ASSEMBLY 1	2	
7	97303-10045-00	BOLT, HEXAGON (97301-10045)	2	
9	148-22315-00-00	CAP	1	
10	98580-06545-00	SCREW PAN HEAD	1	
11	92990-06200-00	WASHER, PLAIN	2	
12	92995-06100-00	WASHER, SPRING	5	
13	95380-06600-00	NUT, HEXAGON	1	
14	98580-06010-00	SCREW, PAN HEAD	3	
15	98580-06020-00	SCREW, PAN HEAD	1	
16	(137-21381-00-00)	BRACKET, RR SHK/ABS	2	
17	98603-06018-00	SCREW, OVAL HEAD	6	
18	92995-06100-00	WASHER, SPRING	6	
19	95380-06600-00	NUT, HEXAGON	6	
21	90201-14218-00	WASHER, PLATE	2	
22	90201-10437-00	WASHER, PLATE	4	
23	92990-10100-00	WASHER, SPRING	4	
24	95303-10800-00	NUT (CROWN)	4	

Classic Cycles Technical Resources

STAND - FOOTREST - BRAKE PEDAL

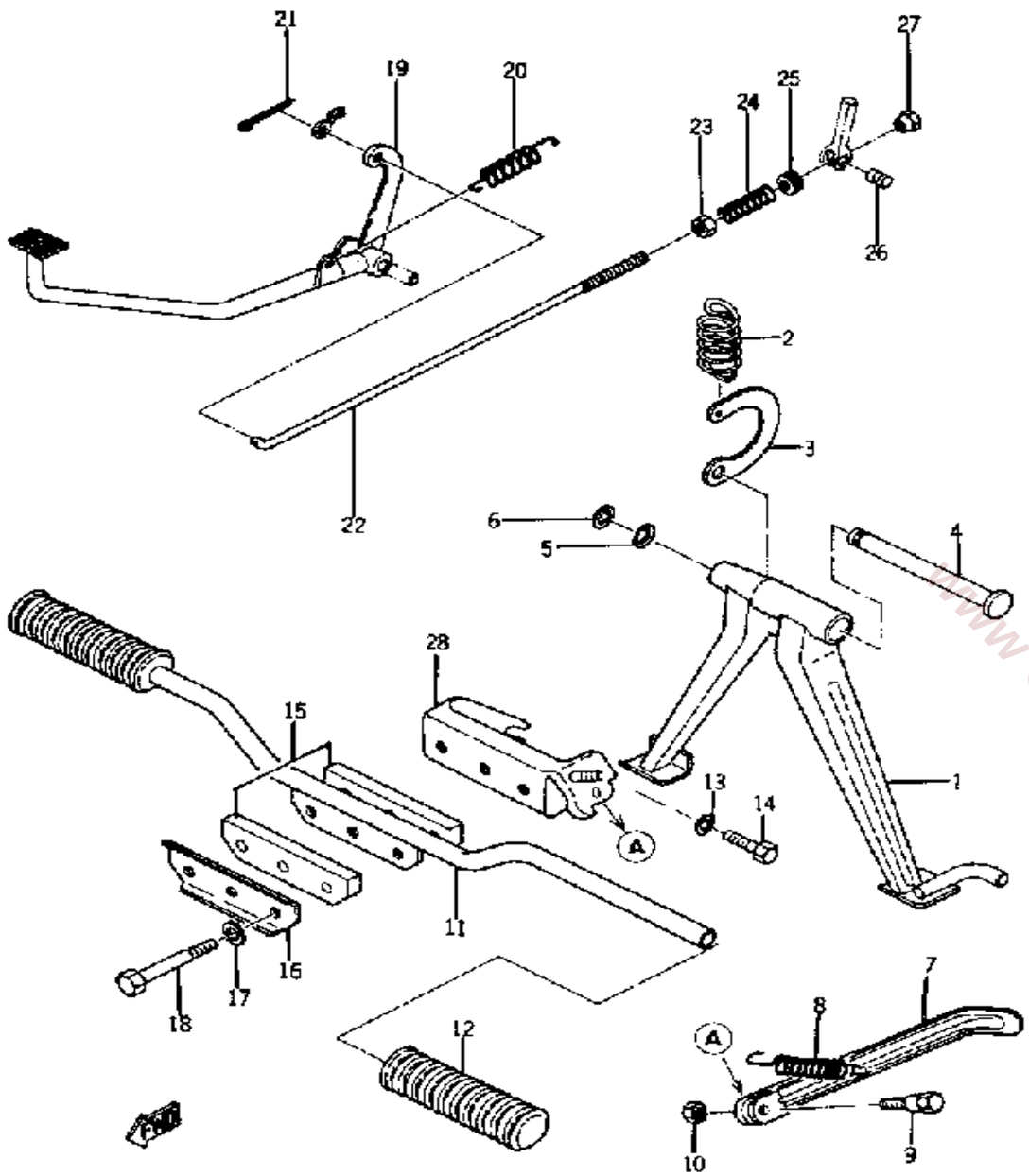

Ref. No.	Part Number	Description	Qty	Remarks
1	(137-27111-00-00)	STAND, MAIN	1	
2	(90506-40061-00)	SPRING, TENSION	1	
3	(137-27115-00-00)	LINK, MAIN STAND	1	
4	(137-27112-01-00)	SHAFT, MAIN STAND	1	
5	(90206-18026-00)	WASHER, WAVE	1	
6	93430-12008-00	CIRCLIP	1	
7	(137-27311-01-00)	STAND, SIDE	1	
8	(90506-29053-00)	SPRING, TENSION	1	
9	90109-08031-00	BOLT	1	
10	95303-08700-00	NUT	1	
11	(137-27411-00-00)	FOOTREST 1	1	
12	136-27413-00-00	COVER, FOOTREST	2	
13	92990-08100-00	WASHER, SPRING	3	
14	97313-08018-00	BOLT, HEXAGON	3	
15	(137-27414-00-00)	DAMPER, FOOTREST	2	
16	(137-27417-00-00)	WASHER, FOOTREST	1	
17	92990-10100-00	WASHER, SPRING	3	
18	90109-08055-00	BOLT (137-27416-00)	3	
19	137-27211-00-93	NO LONGER AVAILABLE	1	
20	90506-23045-00	SPRING, TENSION	1	
21	91490-20020-00	PIN, COTTER (91401-20020-00)	1	
22	(137-27231-02-00)	ROD, BRAKE	1	
23	95380-06600-00	NUT, HEXAGON	1	
24	90501-10245-00	SPRING, COMPRESSION	1	
25	(148-27239-00-00)	SEAT, SPRING	1	
26	90249-12008-00	PIN	1	
27	90179-06411-00	NUT, SPECIAL SHAPE	1	
28	(137-27410-01-00)	FRT FOOTREST ASSEMBLY L	1	

www.classicyeta.org

HANDLE - FRONT FENDER

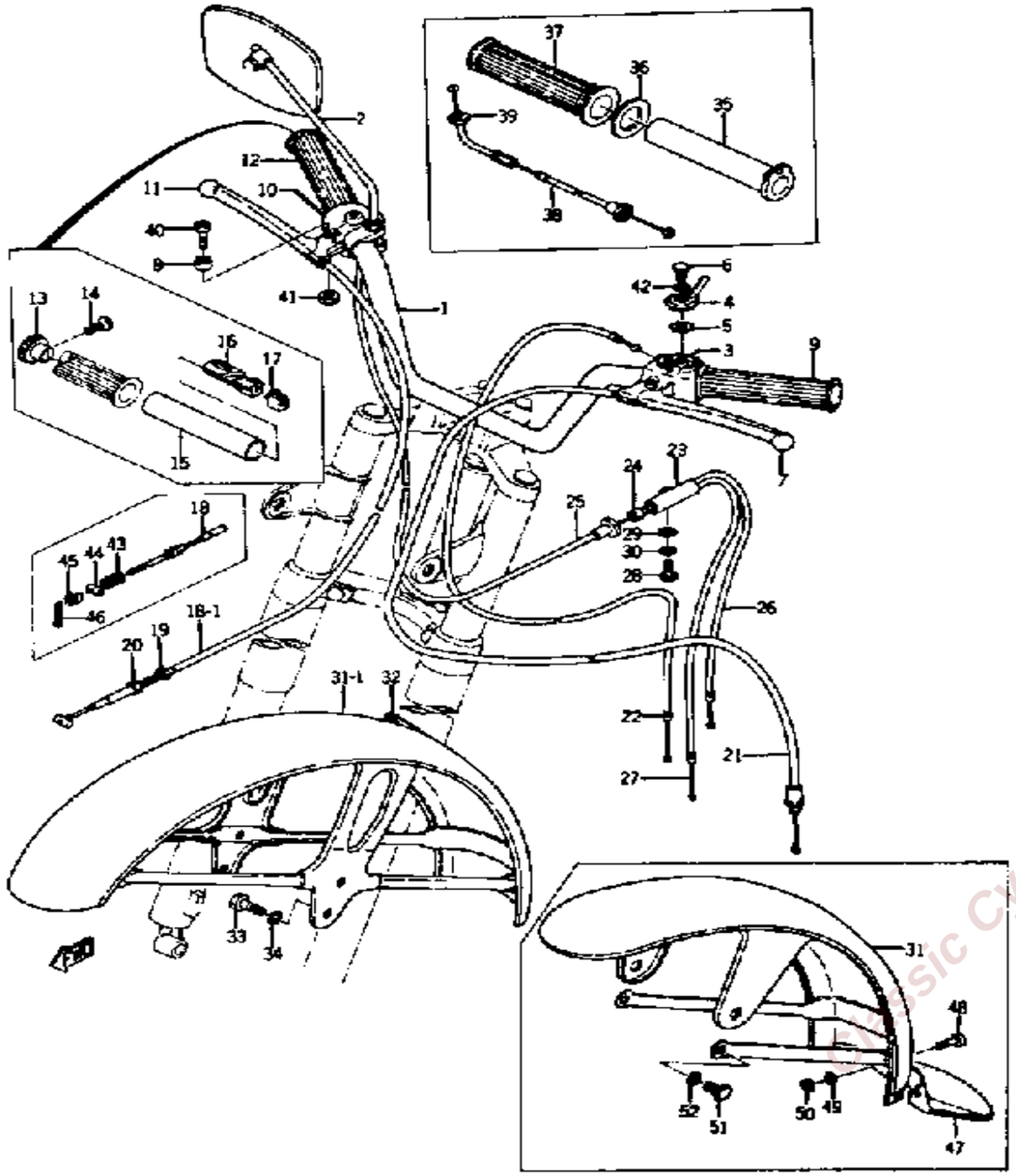

Ref. No.	Part Number	Description	Qty	Remarks
1	(137-26111-11-93)	HANDLEBAR	1	
	(137-26111-60-00)	HANDLEBAR 0 1	1	001~
	109-26341-10-00	CABLE, BRAKE	1	105~
	167-82820-11-94	LEVER HOLDER ASSEMBLY 2	1	001~
2	266-26290-00-00	MIRROR ASSEMBLY RH	1	
3	137-82710-11-00	LEVER HOLDER ASSEMBLY 1	1	
4	137-83941-02-00	LEVER, STARTER (137-83941-01)	1	
5	90209-10131-00	. WASHER	1	
6	90101-06576-00	. BOLT	1	
7	137-83912-02-38	LEVER L	1	
8	137-83913-01-00	. COLLAR, LEVER 1	2	
9	341-26241-00-00	GRIP LH	1	
10	(137-82620-12-94)	LEVER HOLDER ASSEMBLY 2	1	
11	2N3-83922-00-00	LEVER R	1	
12	(136-26242-00-00)	GRIP RH	1	
13	(137-26246-01-00)	END, GRIP	1	
14	(92701-05008-00)	SCREW, FLAT HEAD	1	
15	(148-26243-00-00)	TUBE, THRTL GUIDE	1	
16	137-26244-00-00	SLIDER, THROTTLE	1	
17	(135-26245-00-00)	STOPPER, CABLE	1	
19	90123-06011-00	BOLT	1	
20	90179-06143-00	NUT, SPEC''L SHAPE	1	
21	137-26335-10-00	CABLE, CLUTCH	1	
22	(137-26331-11-00)	CABLE, STARTER 1	1	
23	137-26261-01-00	CONNECTOR, CABLE	1	
24	(137-26263-01-00)	PIECE, CONNECTING	1	
25	137-26311-60-00	CABLE, THROTTLE 1	1	
26	(137-26312-00-00)	CABLE, THROTTLE 2	1	

CONTINUED ON NEXT FRAME ➤

Classic Cycles Technical Resources

HANDLE - FRONT FENDER

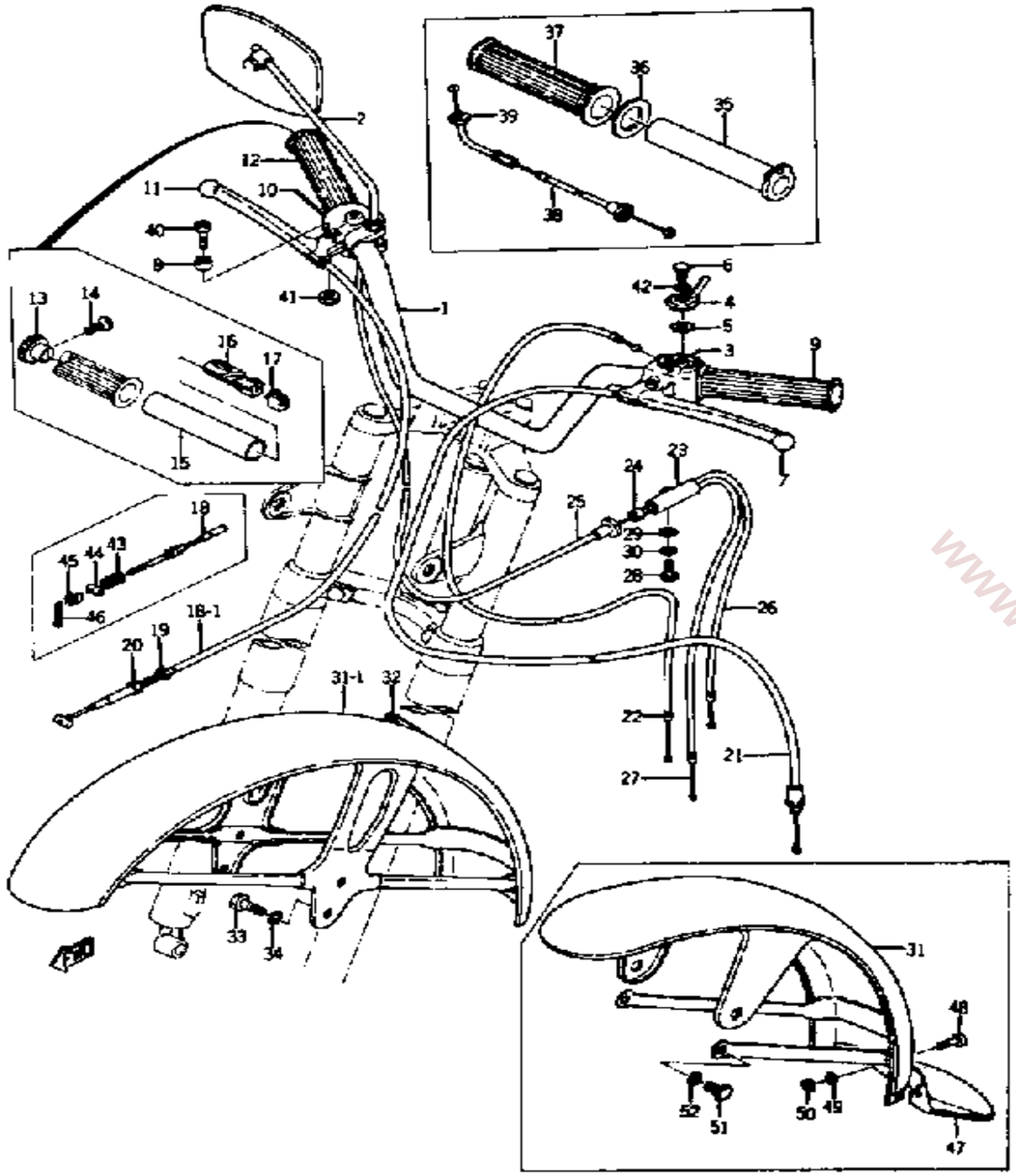

Ref. No.	Part Number	Description	Qty	Remarks
27	(137-26321-00-00)	CABLE, PUMP	1	
28	98580-06012-00	SCREW, PAN HEAD (92501-06012-00)	1	
29	92990-06200-00	WASHER, PLAIN	1	
30	92995-06100-00	WASHER, SPRING	1	
31	(137-21510-60-93)	FENDER, FRONT	1	
32	(137-21517-00-00)	PAD, CABLE	1	
33	97313-08012-00	BOLT, HEXAGON	4	
34	92990-08100-00	WASHER, SPRING	4	
35	1V1-26243-00-00	TUBE, THRTL GUIDE	1	001~
36	150-26249-00-00	RING, LEAF	1	001~
37	(137-26242-60-00)	GRIP RH	1	001~
38	137-26311-60-00	CABLE, THROTTLE 1	1	001~
39	90170-10038-00	NUT, HEXAGON	1	001~
40	98501-05018-00	SCREW, PAN HEAD	2	
41	95311-05700-00	NUT	2	
42	92990-06200-00	WASHER, PLAIN	1	
43	(90501-08038-00)	SPRING, COMPRESSION	1	
44	(90249-10101-00)	PIN, SPEC''L SHAPE	1	
45	(90179-05150-00)	NUT, SPEC''L SHAPE	1	
46	91401-10015-00	PIN, COTTER	1	
47	(137-21521-00-33)	FLAP, FRONT FENDER	1	
48	98580-06010-00	SCREW, PAN HEAD	3	
49	92995-06100-00	WASHER, SPRING	3	
50	95380-06700-00	NUT	3	
51	97011-06010-00	BOLT (97002-06010)	2	
52	92995-06100-00	WASHER, SPRING	2	

www.Classicvelosoy

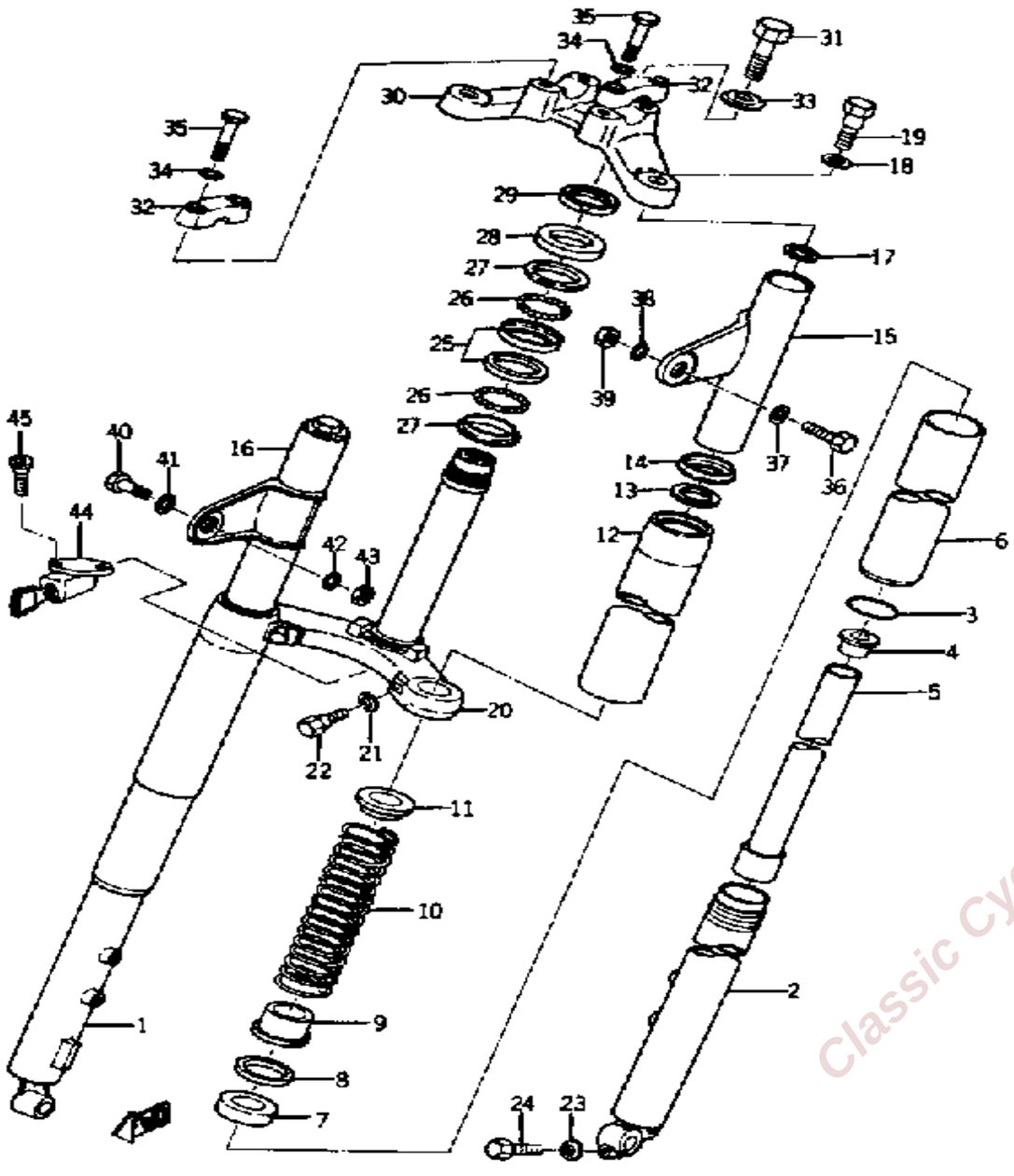

FRONT FORK

Ref. No.	Part Number	Description	Qty	Remarks
1	(137-23136-60-81)	. TUBE, OUTER 2	1	
2	(137-23126-60-81)	. TUBE, OUTER 1	1	
3	137-23147-00-00	. O-RING	2	
4	(137-23125-01-00)	. METAL, SLIDE 1	2	
5	(137-23124-00-00)	. TUBE, INNER 1	2	
6	(137-23150-00-00)	. OUTER NUT	2	
7	137-23145-01-00	. OIL SEAL	2	
8	(137-23146-00-00)	. WASHER, OIL SEAL	2	
9	(137-23143-00-00)	. SEAT, SPRING LOWER	2	
10	(137-23141-00-00)	. SPRING, FRONT FORK	2	
11	(137-23142-00-00)	. SEAT, SPRING UPPER	2	
13	(437-23163-00-00)	. GASKET	2	
14	(137-23116-00-00)	. GUIDE, COVER LOWER	2	
17	(137-23114-00-00)	. GASKET	2	
18	(137-23112-00-00)	. WASHER, CAP	2	
19	(137-23111-00-00)	. BOLT, CAP	2	
21	92990-10100-00	. WASHER, SPRING	2	
22	5J0-23346-00-00	. BOLT 1	2	
23	92990-08100-00	. WASHER, SPRING	1	
24	97313-08030-00	. BOLT, HEXAGON	1	
25	156-23412-00-00	RACE, BALL 2	2	
26	93501-04011-00	BALL	38	
27	156-23411-00-00	RACE, BALL 1	2	
28	136-23415-00-00	COVER, BALL RACE 1	1	
29	90179-25033-00	NUT	1	
30	(137-23435-01-00)	CROWN, HANDLE	1	
31	90105-10006-00	BOLT, WASHER BASED	1	
32	(137-23441-00-00)	HOLDER, HANDLE UPR	2	
	(137-23441-01-00)	HOLDER, HANDLE UPR 0 2 . . .	2	326~

CONTINUED ON NEXT FRAME ➤

Classic Cycles Technical Resources

FRONT FORK

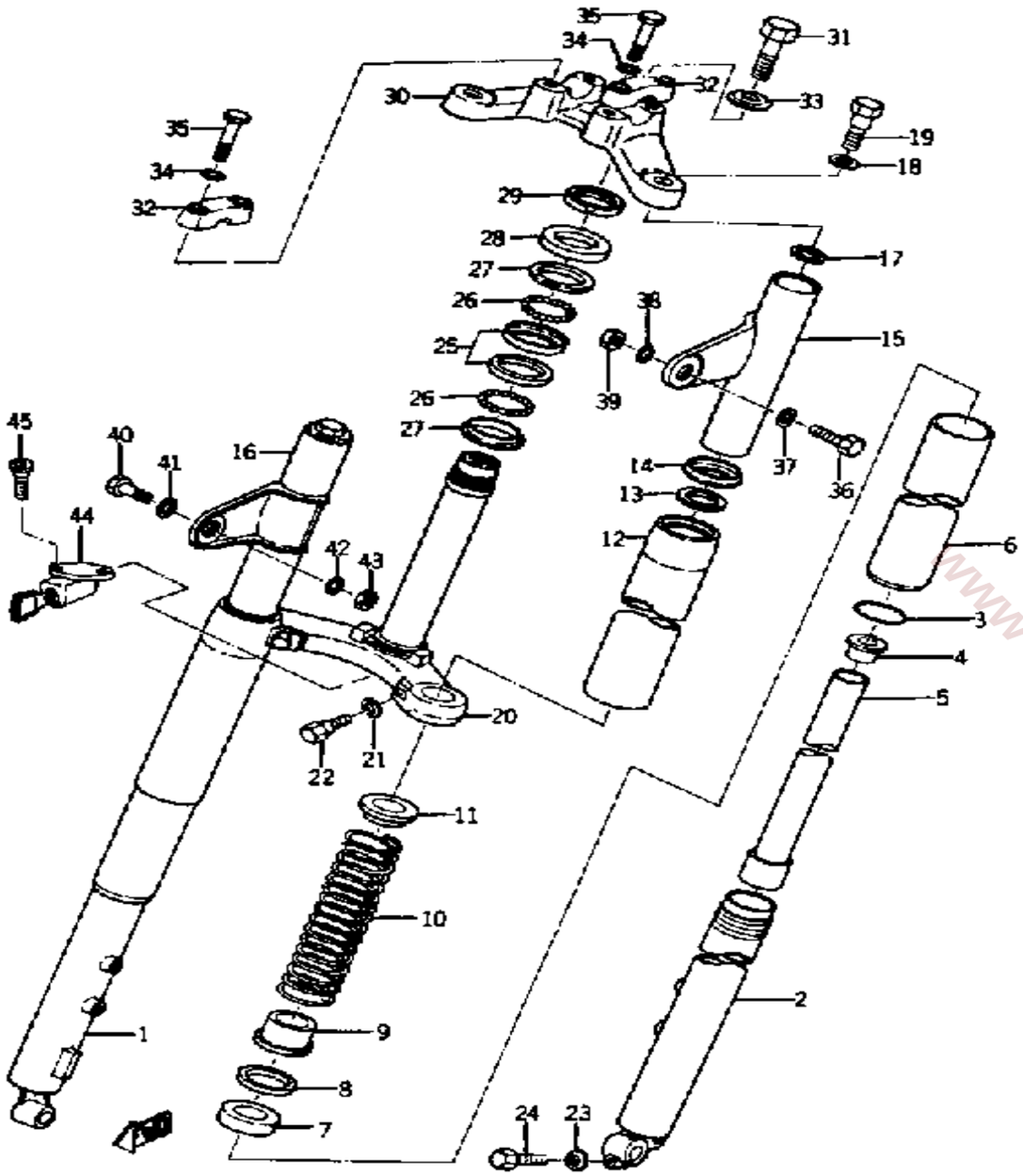

Ref. No.	Part Number	Description	Qty	Remarks
33	(90201-10147-00)	WASHER, PLATE	1	
34	92990-08100-00	WASHER, SPRING	4	26~
	92995-06100-00	WASHER, SPRING	4	
35	97013-06035-00	BOLT	4	
	97313-08035-00	BOLT, HEXAGON	4	326~
36	97313-08030-00	BOLT, HEXAGON	1	
37	92990-08200-00	WASHER, PLAIN	1	
38	92990-08100-00	WASHER, SPRING	1	
39	95303-08700-00	NUT	1	
40	97313-08030-00	BOLT, HEXAGON	1	
41	92990-08200-00	WASHER, PLAIN	1	
42	92990-08100-00	WASHER, SPRING	1	
43	95303-08700-00	NUT	1	
44	(137-23480-00-00)	STEERING LOCK ASSEMBLY	1	
45	98701-06014-00	SCREW, FLAT HEAD	2	

www.ClassicCycles.org

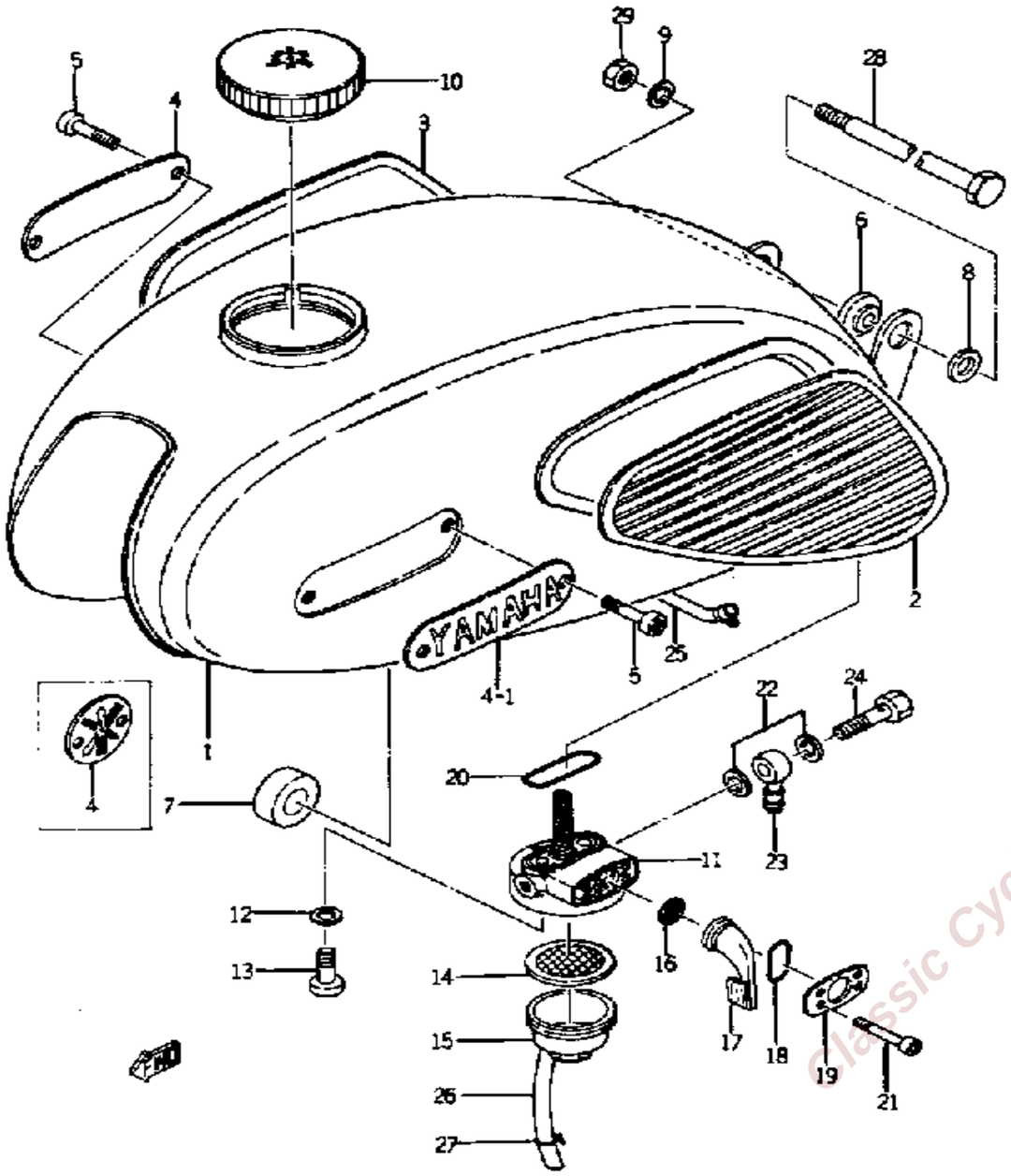

FUEL TANK

Ref. No.	Part Number	Description	Qty	Remarks
1	(137-24110-02-81)	FUEL TANK	1	
	(137-24500-09-00)	FUEL COCK ASSEMBLY 1	1	
2	(137-24171-00-00)	GRIP, KNEE 1	1	
3	(137-24172-00-00)	GRIP, KNEE 2	1	
4	(137-24161-00-00)	EMBLEM 1	2	
	132-24161-00-00	EMBLEM 1	2	001~
5	(92503-04008-00)	SCREW, PAN HEAD	4	
6	(137-24182-00-00)	DAMPER, LOCATING 2	2	
7	(137-24181-00-00)	DAMPER, LOCATING 1	2	
8	90201-08107-00	WASHER, PLATE	1	
9	90201-06072-00	WASHER, PLATE	1	
10	137-24610-00-00	CAP ASSEMBLY	1	
12	90430-06013-00	GASKET (137-24513-00)	2	
13	98580-06030-00	SCREW PAN HEAD	2	
14	(137-24515-00-00)	NET, FILTER 2	1	
15	(137-24521-00-00)	CUP, FILTER	1	
16	137-24523-00-00	GASKET	1	
17	(137-24524-00-00)	LEVER, COCK	1	
18	90206-18025-00	WASHER, WAVE	1	
19	(137-24525-00-00)	PLATE, LVR FITTING	1	
20	(137-24512-00-00)	GASKET	1	
21	92503-04006-00	UNAVAILABLE IN PRICE BOOK	4	
22	90202-05187-00	WASHER, PLATE	2	
23	(101-24526-00-00)	COLLAR, BANJO BOLT	1	
24	90401-08003-00	BOLT, UNION (102-24527-00)	1	
25	90445-09083-00	HOSE	1	
26	90445-09111-00	HOSE	1	
27	90467-08003-00	CLIP	4	
28	(137-24176-00-00)	BOLT 1	1	

CONTINUED ON NEXT FRAME ➤

classic Cycles Technical Resources

FUEL TANK

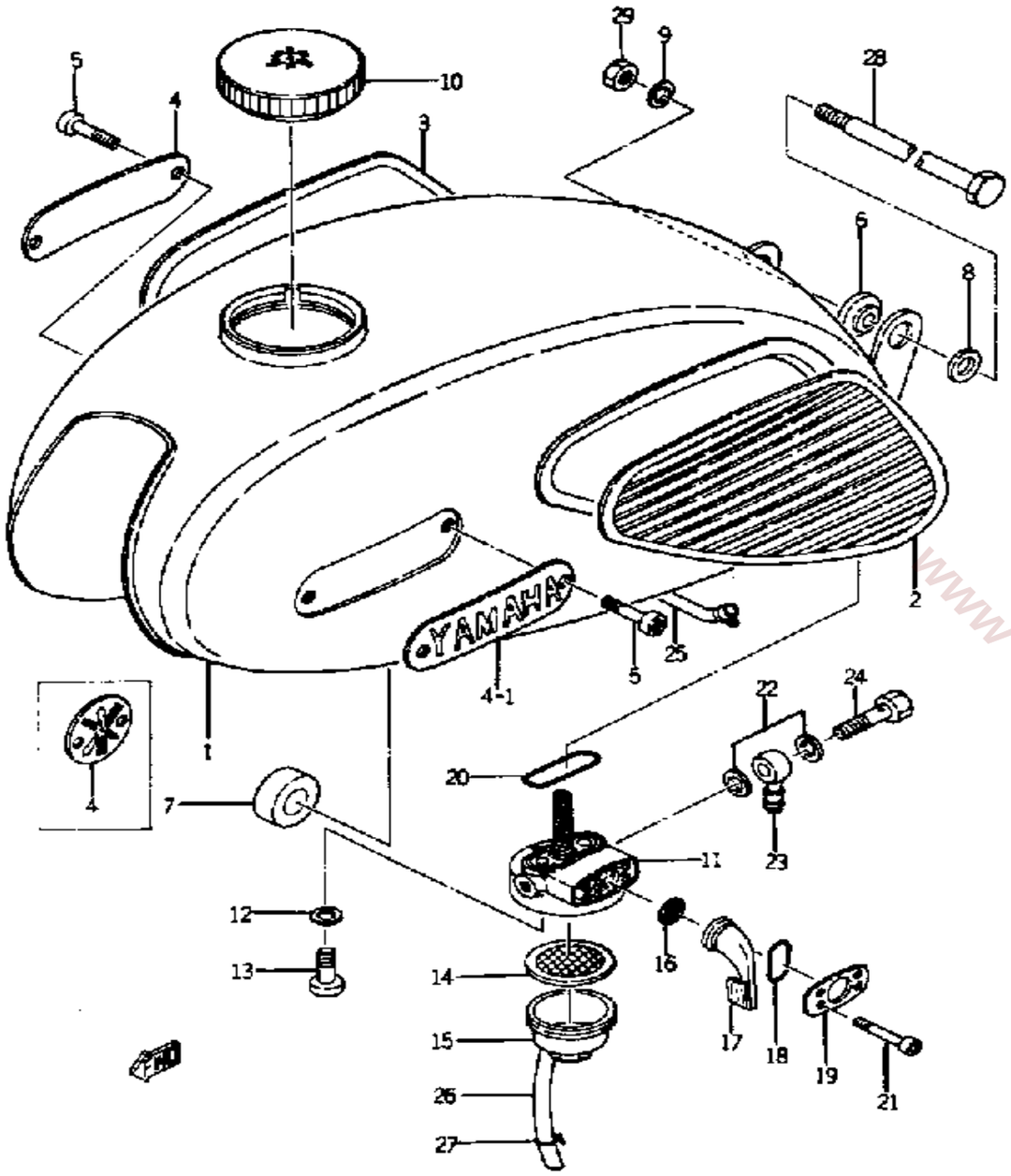

Ref. No.	Part Number	Description	Qty	Remarks
29	95380-06600-00	NUT, HEXAGON	1	

www.ClassicCycles.org

OIL TANK

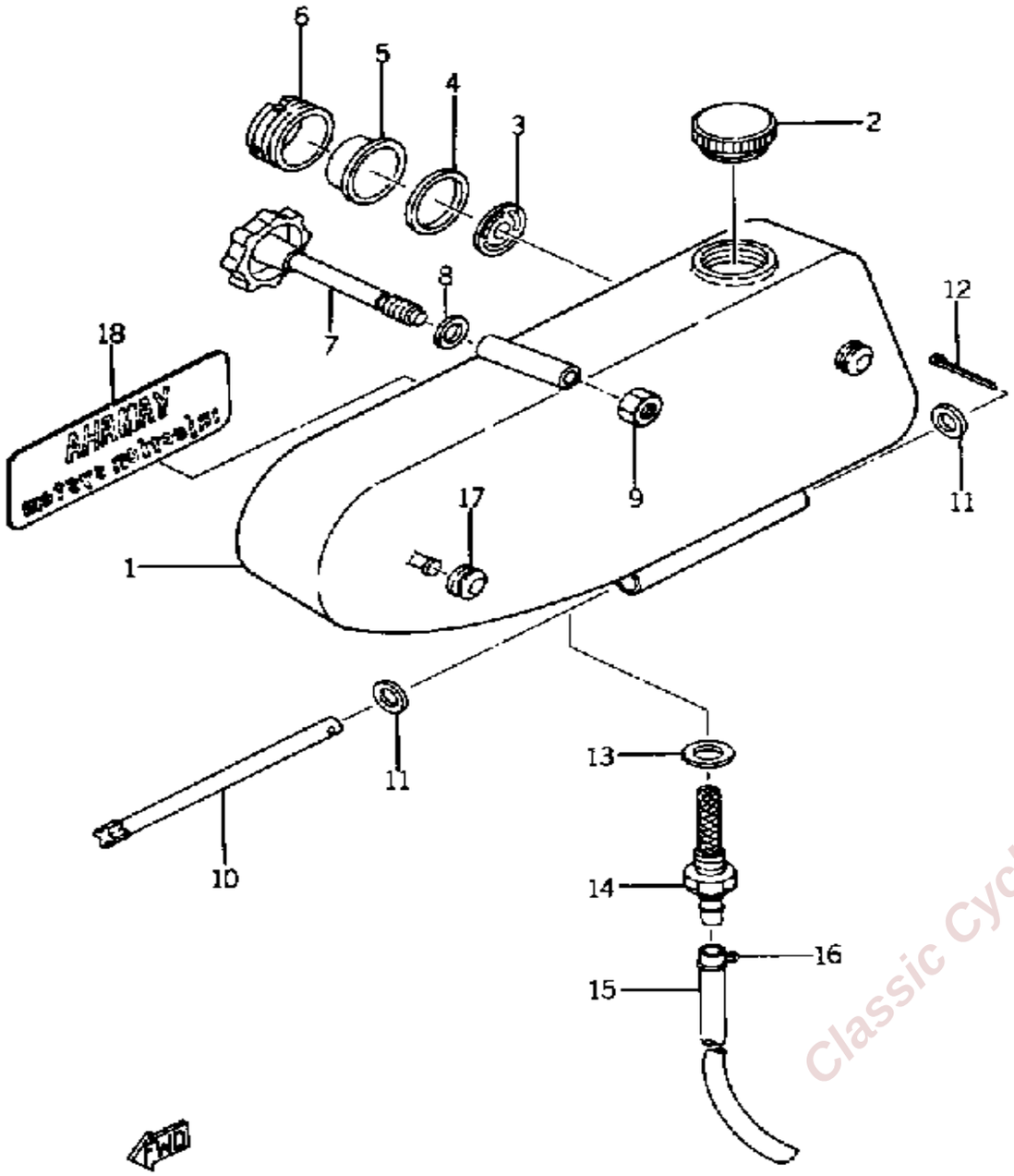

Ref. No.	Part Number	Description	Qty	Remarks
2	(137-21771-61-00)	BODY, CAP	1	
3	(137-21761-00-00)	GAUGE, LEVEL	1	
4	(137-21763-00-00)	GASKET, LEVEL GAUGE	1	
5	137-21764-00-00	LENS, LEVEL GAUGE	1	
6	90179-36107-00	NUT, SPEC''L SHAPE (137-21762-00)	1	
7	(137-21714-01-00)	KNOB, SIDE COVER 1	1	
8	92990-06200-00	WASHER, PLAIN	1	
9	95380-06700-00	NUT	2	
10	(90249-05071-00)	PIN, SPEC''L SHAPE	1	
11	92990-05200-00	WASHER, PLAIN	2	
12	91401-12018-00	PIN, COTTER	1	
13	(90430-10029-00)	GASKET	1	
14	(137-21768-01-00)	SCREW, UNION	1	
15	90445-09118-00	HOSE (137-24319-00)	1	
16	90467-08003-00	CLIP	2	
17	(137-21778-00-00)	DAMPER, LOCATING 1	2	
18	(137-21782-60-00)	EMBLEM 2	1	

Classic Cycles Technical Resources

SEAT - CARRIER

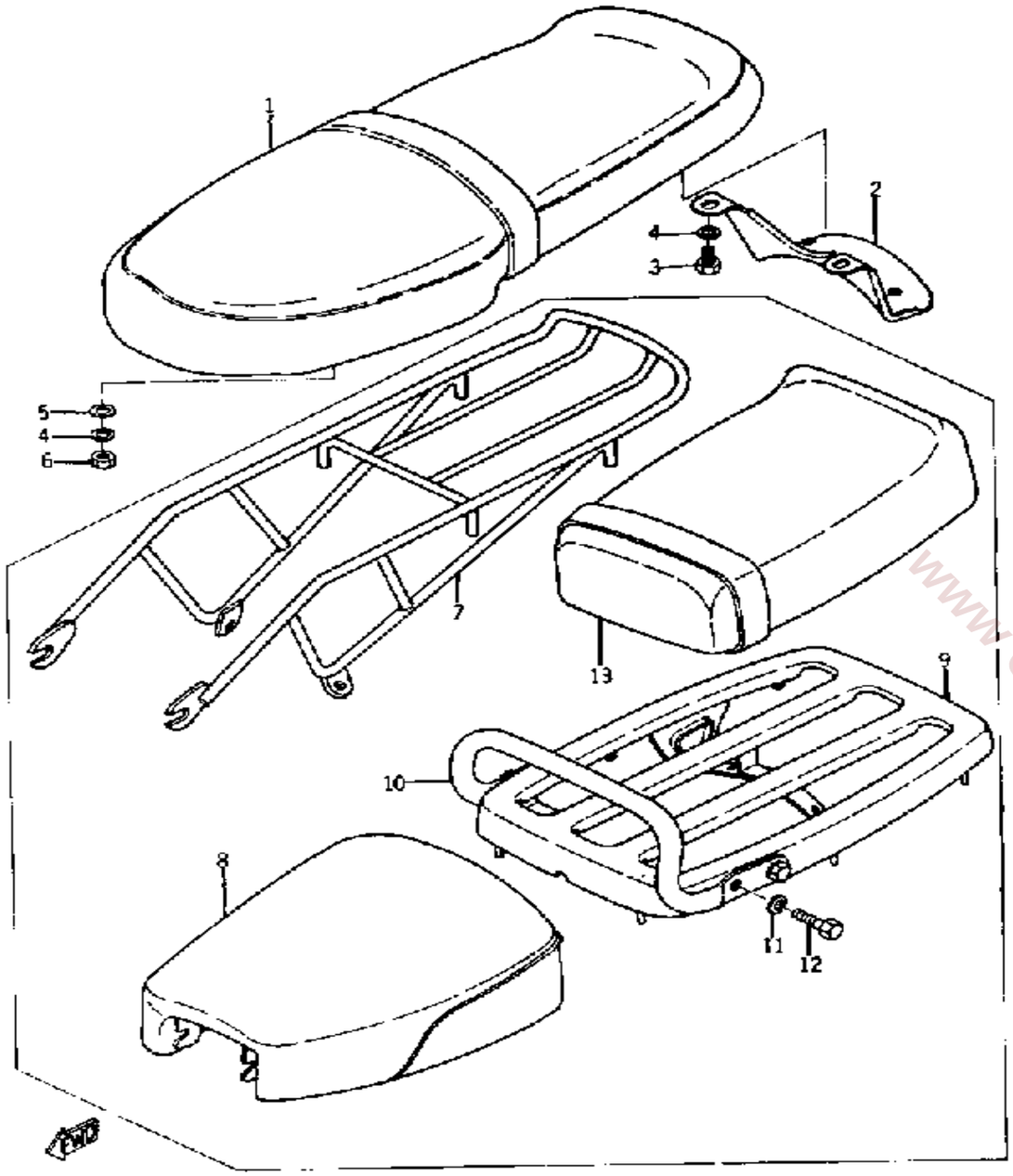

Ref. No.	Part Number	Description	Qty	Remarks
1	(136-24751-00-00)	COVER, TANDEM SEAT	4	OPTIONAL PARTS
	(137-24730-00-00)	DOUBLE SEAT ASSEMBLY	1	
	(137-24731-00-00)	COVER, DOUBLE SEAT	1	
2	(137-24738-00-33)	BRACKET, SEAT	1	
3	97313-08016-00	BOLT, HEXAGON	2	
4	92990-08100-00	WASHER, SPRING	4	
5	92990-08200-00	WASHER, PLAIN	2	
6	95333-08600-00	NUT	2	
7	(137-24830-00-00)	SUB CARRIER	1	OPTIONAL PARTS
10	(137-24812-00-00)	HANDLE	1	OPTIONAL PARTS
11	92995-06100-00	WASHER, SPRING	4	OPTIONAL PARTS
12	97013-06012-00	BOLT	4	OPTIONAL PARTS

www.ClassicCycles.org

FRONT WHEEL

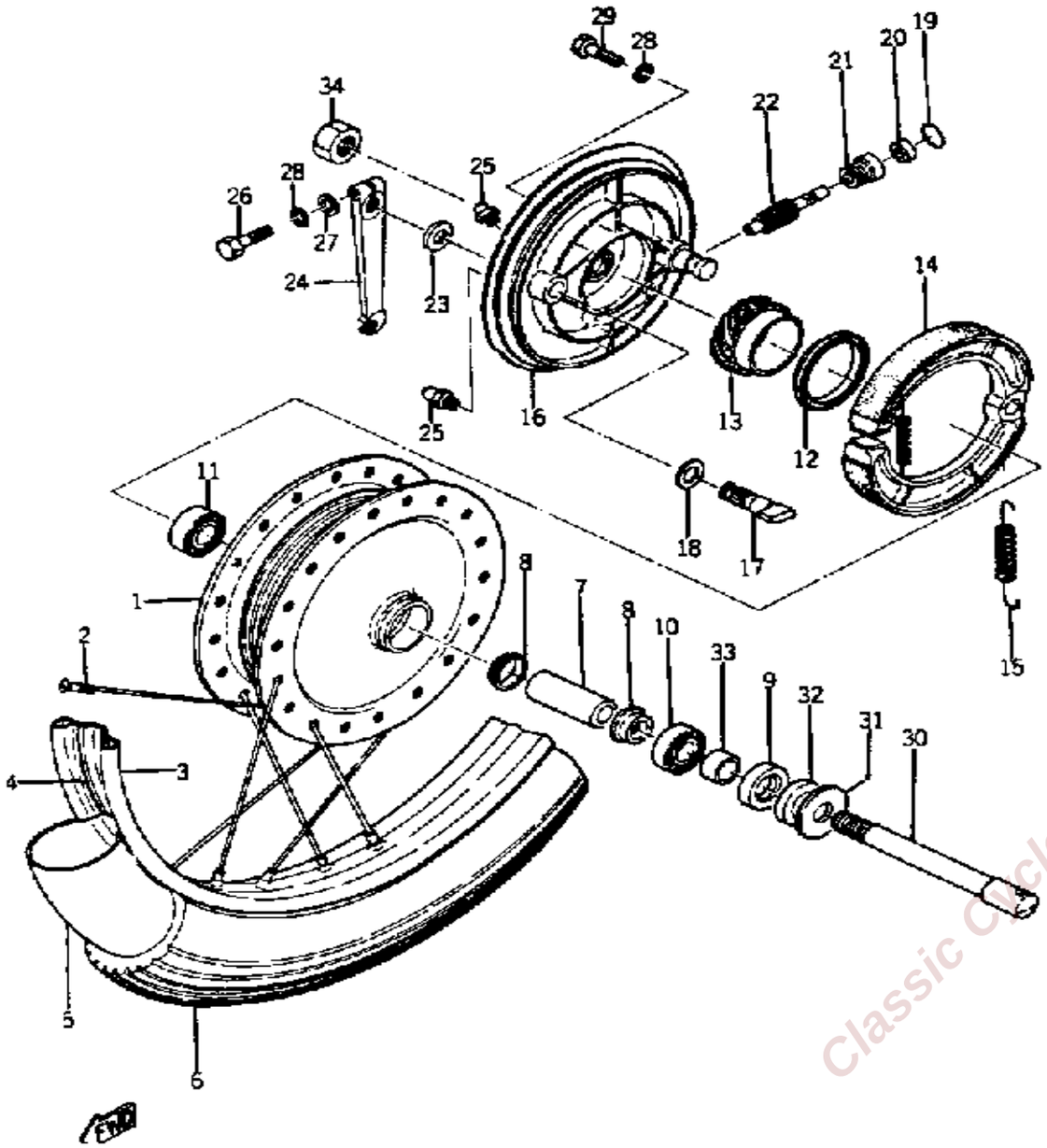

Ref. No.	Part Number	Description	Qty	Remarks
1	(136-25111-02-00)	HUB, FRONT	1	
	137-25155-00-00	LEVER, CAMSHAFT 1	1	641~
2	(136-25104-00-00)	SPOKE SET, FRONT	1	
3	94416-16008-00	RIM 1.60X 6	1	
4	94330-16058-00	BAND, RIM (3.00-16)	1	
5	(94230-16011-00)	TUBE	1	
6	(94130-16029-00)	300X16 YOKOHAMA	1	
7	90560-15290-00	SPACER	1	
8	146-25116-00-00	FLANGE, SPACER 2	2	
9	93102-20009-00	OIL SEAL, SD-TYPE	1	
10	93306-20211-00	BEARING (6202SH2-C3)	1	
11	93306-20226-00	BEARING	1	
12	93107-48002-00	OIL SEAL, OS-TYPE (OS-47.5-60-7)	1	
13	(135-25135-00-00)	GEAR, DRIVE	1	
14	136-W2535-00-00	BRAKESHOE SET-2PCS	2	
15	90507-20002-00	SPRING, TENSION	2	
16	(137-25121-01-00)	PLATE, BRAKE SHOE	1	
17	(136-25151-01-00)	CAMSHAFT	1	
18	90201-25286-00	WASHER, PLATE (341-25147-00)	1	
19	93210-14104-00	O-RING	1	
20	93104-07003-00	OIL SEAL	1	
21	109-25136-00-00	BUSH	1	
22	(136-25138-00-00)	GEAR, METER	1	
23	137-25159-00-00	SEAL, CAMSHAFT	1	
24	(136-25155-00-00)	LEVER, CAMSHAFT 1	1	
25	93700-06M03-00	NIPPLE, GREASE	2	
26	97023-06020-00	BOLT (3XF) (97302-06020)	1	

Classic Cycles Technical Resources

CONTINUED ON NEXT FRAME ➤

FRONT WHEEL

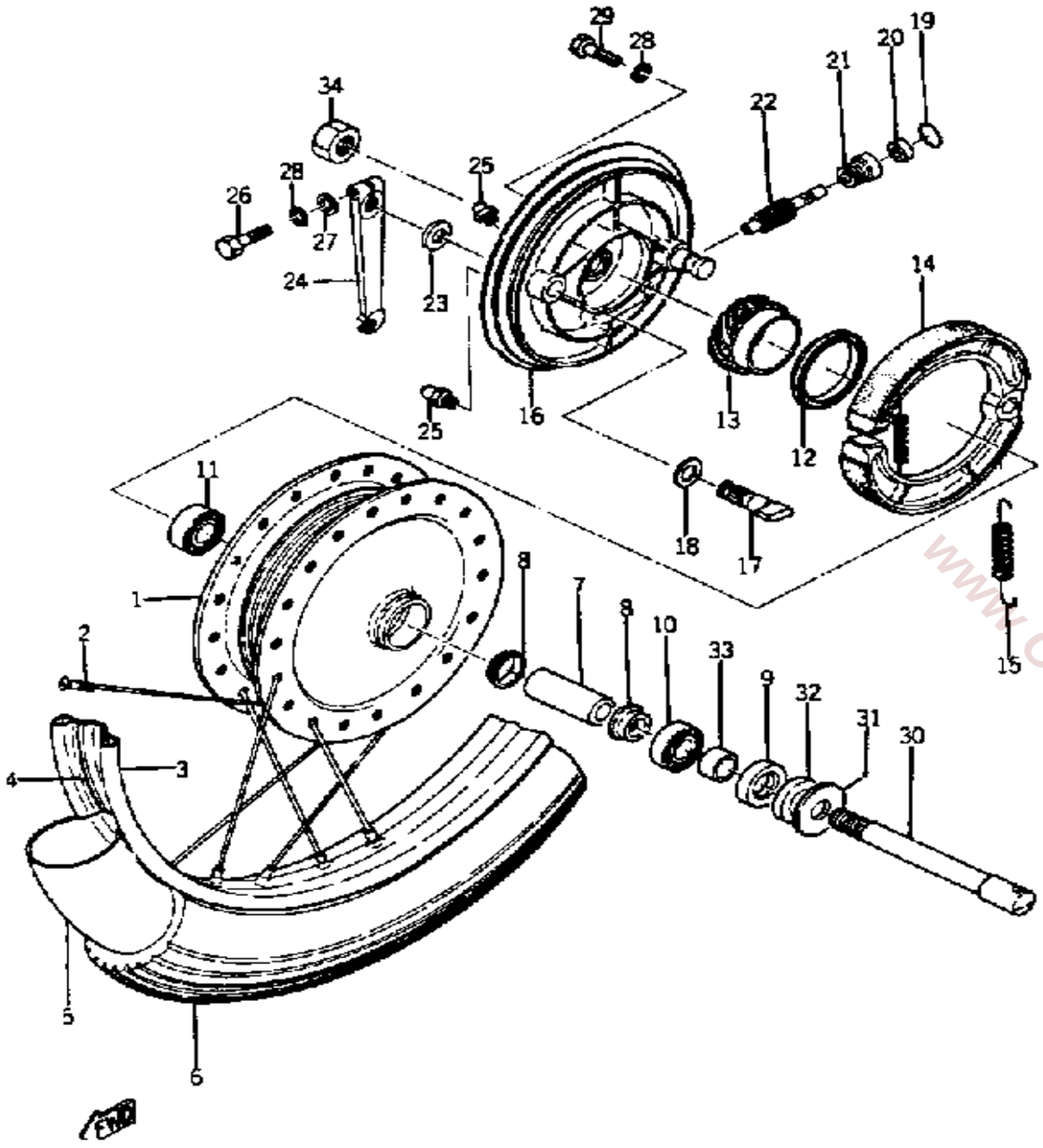

Ref. No.	Part Number	Description	Qty	Remarks
27	92990-06200-00	WASHER, PLAIN	1	
28	92995-06100-00	WASHER, SPRING	2	
29	97011-06025-00	BOLT (97001-06025)	1	
30	(141-25181-00-00)	AXLE, WHEEL	1	
31	(136-25127-00-00)	COVER, PLATE	1	
32	(136-25129-00-00)	SEAL, PLATE DUST	1	
33	90387-157G5-00	COLLAR (136-25183-00)	1	
34	95312-14600-00	NUT	1	

www.ClassicCycles.org

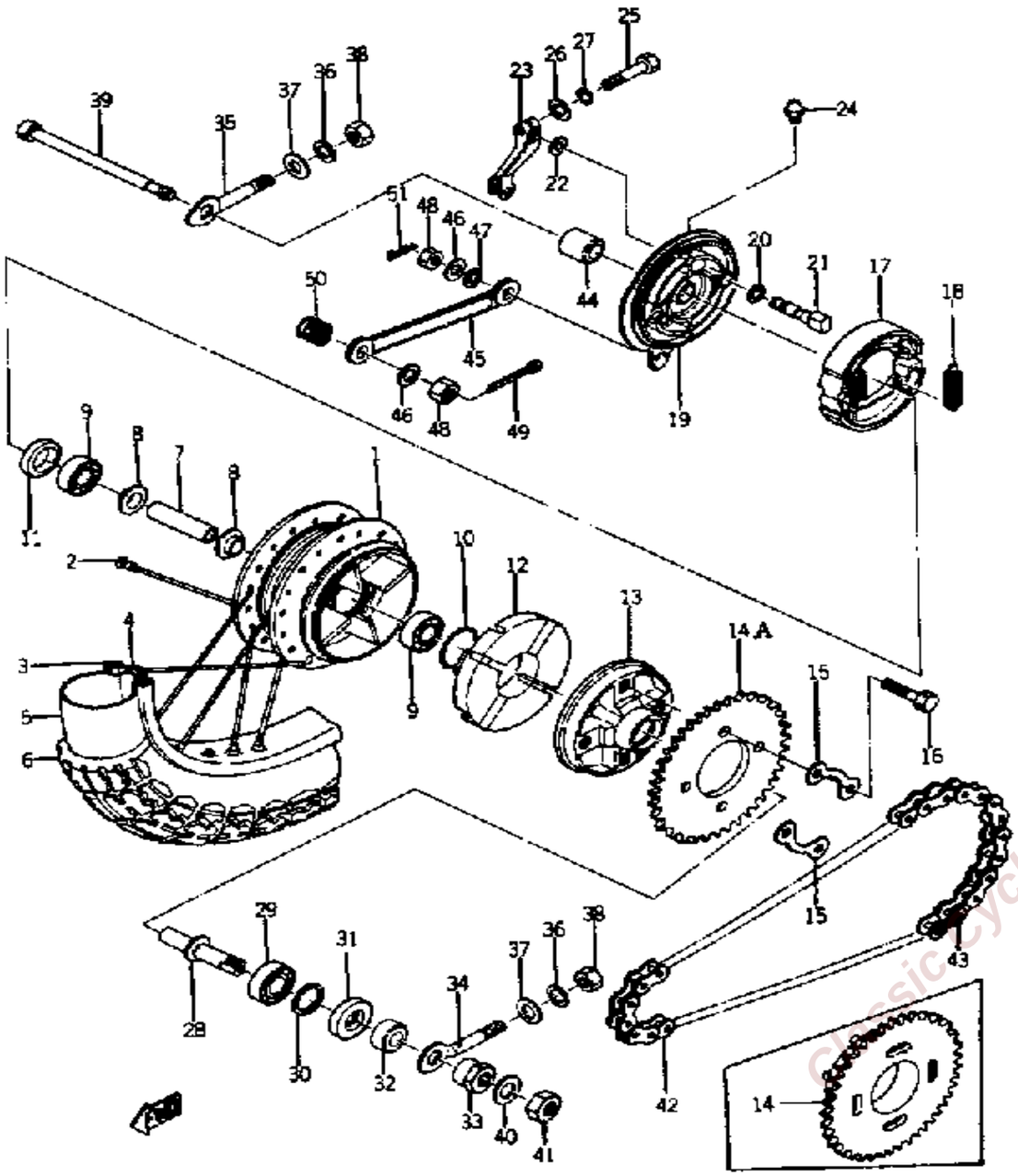

REAR WHEEL

Ref. No.	Part Number	Description	Qty	Remarks
1	(136-25311-02-38)	HUB, REAR	1	
	174-25439-20-33	SPROCKET, DRIVN 39T	1	577~
2	(136-25304-00-00)	SPOKE SET, REAR	1	
	(174-25441-20-00)	SPROCKET, DRIVN 41T 0 1	1	577~
3	94416-16008-00	RIM 1.60X 6	1	
4	94330-16058-00	BAND, RIM (3.00-16)	1	
5	(94230-16011-00)	TUBE	1	
6	(94130-16030-00)	300X16 YOKOHAMA	1	
7	90560-15136-00	SPACER (136-25317-00)	1	
8	146-25116-00-00	FLANGE, SPACER 2	2	
9	93306-20226-00	BEARING	2	
10	93210-41042-00	O-RING	1	
11	93101-42018-00	OIL SEAL, S-TYPE	1	
12	(136-25364-01-00)	DAMPER	1	
13	(137-25366-00-00)	CLUTCH, HUB 0 1	1	577~
14	14A---	UNAVAILABLE IN PRICE BOOK 0 1	1	577~
	174-25439-20-33	SPROCKET, DRIVN 39T	1	
15	148-25412-00-00	WASHER	2	
16	90105-10005-00	BOLT, WASHER BASED (141-25411-00)	4	
17	136-W2535-00-00	BRAKESHOE SET-2PCS	2	
18	90507-20002-00	SPRING, TENSION	2	
19	(397-25320-10-00)	BRAKE SHOE PLT ASSEMBLY	1	
20	(136-25153-00-00)	SHIM, CAMSHAFT	1	
21	(136-25351-01-00)	CAMSHAFT	1	
22	137-25159-00-00	SEAL, CAMSHAFT	1	
23	122-25355-00-00	LEVER, CAMSHAFT	1	
24	93700-06M03-00	NIPPLE, GREASE	1	

CONTINUED ON NEXT FRAME ➤

Classic Cycles Technical Resources

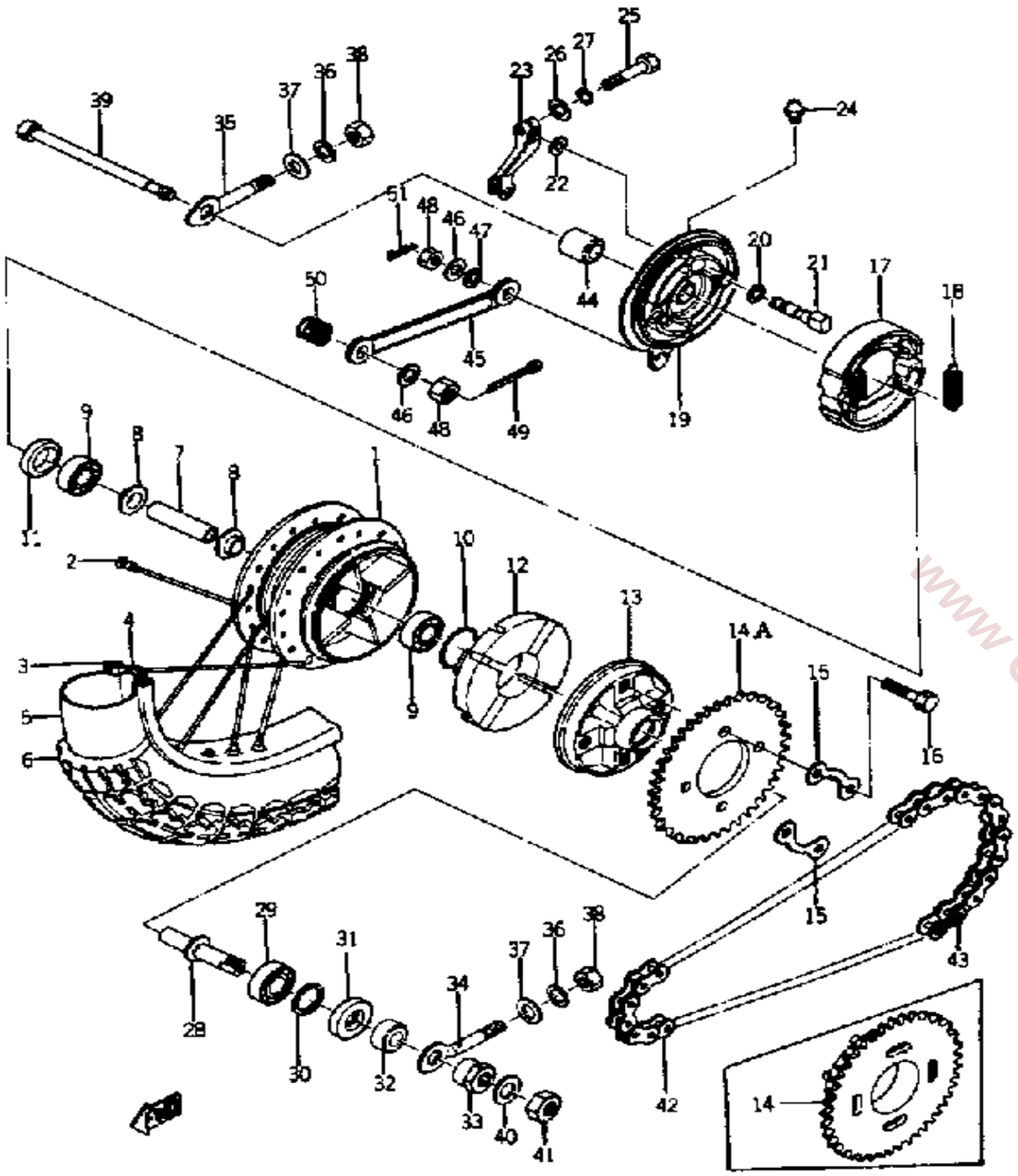

REAR WHEEL

Ref. No.	Part Number	Description	Qty	Remarks
25	97023-06020-00	BOLT (3XF) (97302-06020)	1	
26	92990-06200-00	WASHER, PLAIN	1	
27	92995-06100-00	WASHER, SPRING	1	
28	(137-25387-00-00)	AXLE, SPROCKET	1	
29	93306-00406-00	BEARING (B6004Z)	1	
30	99009-42500-00	CIRCLIP	1	
31	93106-30004-00	OIL SEAL	1	
32	(90387-20158-00)	COLLAR	1	
33	90170-20167-00	NUT, HEXAGON (137-25385-00)	1	
34	(137-25388-00-00)	PULLER, CHAIN 1	1	
35	137-25389-00-00	PULLER, CHAIN 2	1	
36	92995-06100-00	WASHER, SPRING	2	
37	92990-06200-00	WASHER, PLAIN	2	
38	95380-06600-00	NUT, HEXAGON	2	
39	(137-25381-00-00)	AXLE, WHEEL	1	
40	(90201-15312-00)	WASHER, PLATE	1	
41	95312-14600-00	NUT	1	
42	(94504-28108-00)	428 STD 108L	1	
43	94680-24001-00	. CHAIN JOINT	1	
44	90387-15119-00	COLLAR (137-25383-00)	1	
45	(136-25371-00-00)	BAR, TENSION	1	
46	92990-10200-00	WASHER, PLAIN	2	
47	92901-12100-00	WASHER, SPRING	1	
48	95303-10700-00	NUT	2	
49	91490-20020-00	PIN, COTTER (91401-20020-00)	1	
50	(90501-20129-00)	SPRING, COMPRESSION	1	
51	90468-12006-00	CLIP	1	

www.ClassicCycleParts

HEAD LAMP - TAIL LAMP

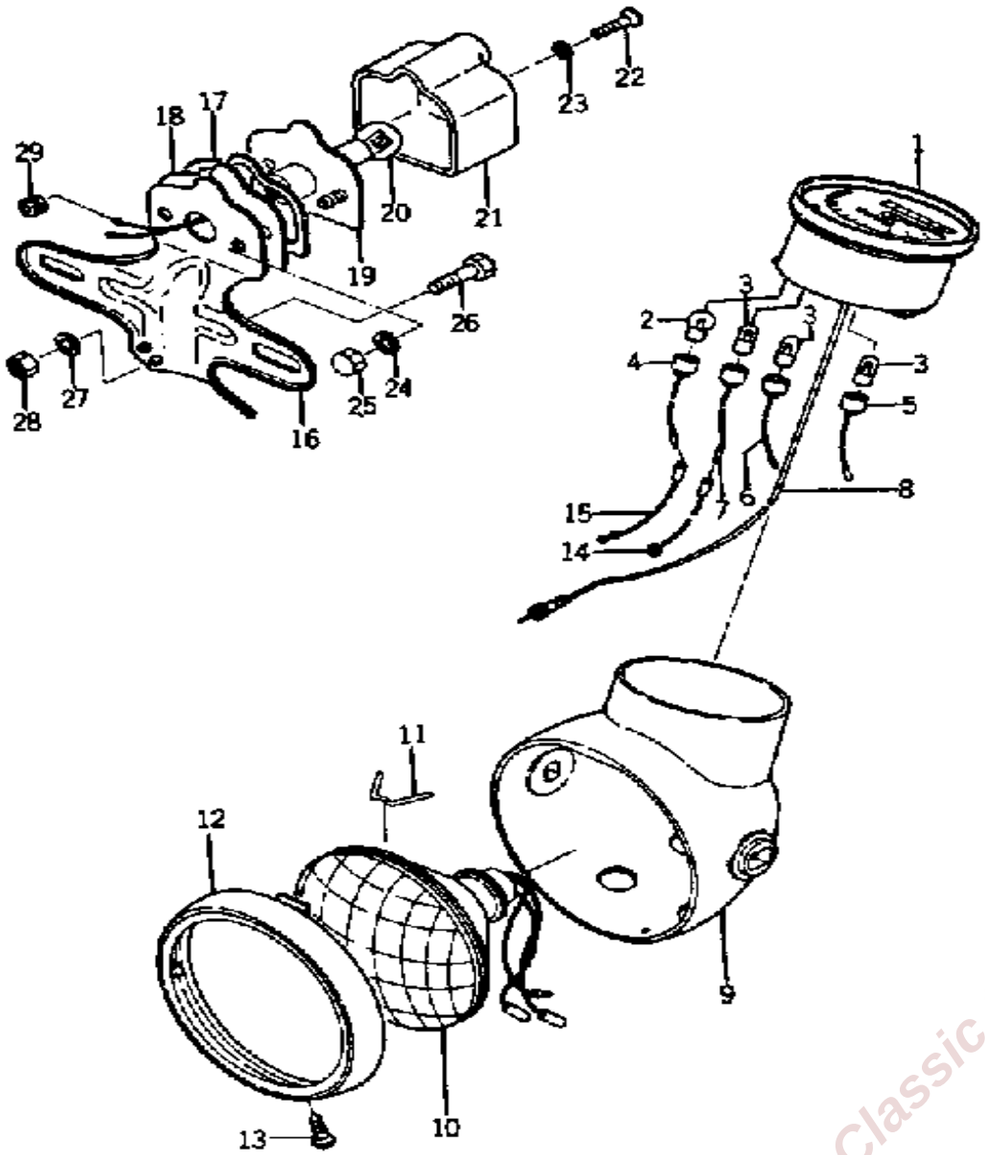

Ref. No.	Part Number	Description	Qty	Remarks
1	(037-83550-00-00)	SPEEDOMETER CABLE	1	
	(137-83510-40-00)	SPEEDOMETER ASSEMBLY	1	
	(137-84300-60-22)	HEADLIGHT ASSEMBLY	1	
2	(137-84710-60-00)	TAILLIGHT UNIT ASSEMBLY	1	
	123-83516-21-00	. BULB (12V-3.4W)	1	
3	256-84347-00-00	. BULB	3	
4	(136-83536-20-00)	SOCKET, METER	1	
5	(136-83539-20-00)	SOCKET, CHARGE	1	
6	(136-83539-20-00)	SOCKET, CHARGE	1	
7	(136-83538-20-00)	SOCKET, FLASHER	1	
8	(137-83550-11-00)	SPEEDOMETER CABLE	1	
9	(136-84330-00-28)	BODY ASSEMBLY	1	
10	(136-84320-60-00)	LENS ASSEMBLY	1	
11	(136-84324-00-00)	SPRING, REFLECTOR	3	
12	(136-84315-61-00)	RIM, HEADLIGHT	1	
13	(150-84125-00-00)	SCREW, RIM FITTING	1	
14	(122-84148-00-00)	WIRE, LEAD 1	1	
15	(122-84149-00-00)	WIRE, LEAD 2	1	
17	(124-84512-60-00)	SEAT, BASE	1	
18	(124-84516-60-00)	COVER, TAILLIGHT	1	
19	(137-84711-60-00)	BASE, TAILLIGHT	1	
20	137-84714-61-00	. BULB, TL 12V23/8W	1	
21	(124-84521-60-00)	LENS, TAILLIGHT	1	
22	92503-04015-00	. SCREW, PAN HEAD	2	
23	(124-84522-60-00)	WASHER	2	
24	92901-06300-00	. WASHER, IN.TOOTH	2	
25	95303-06800-00	. NUT (CROWN)	2	
26	97013-06012-00	BOLT	4	
27	92995-06100-00	WASHER, SPRING	4	

CONTINUED ON NEXT FRAME ➤

Classic Cycles Technical Resources

HEAD LAMP - TAIL LAMP

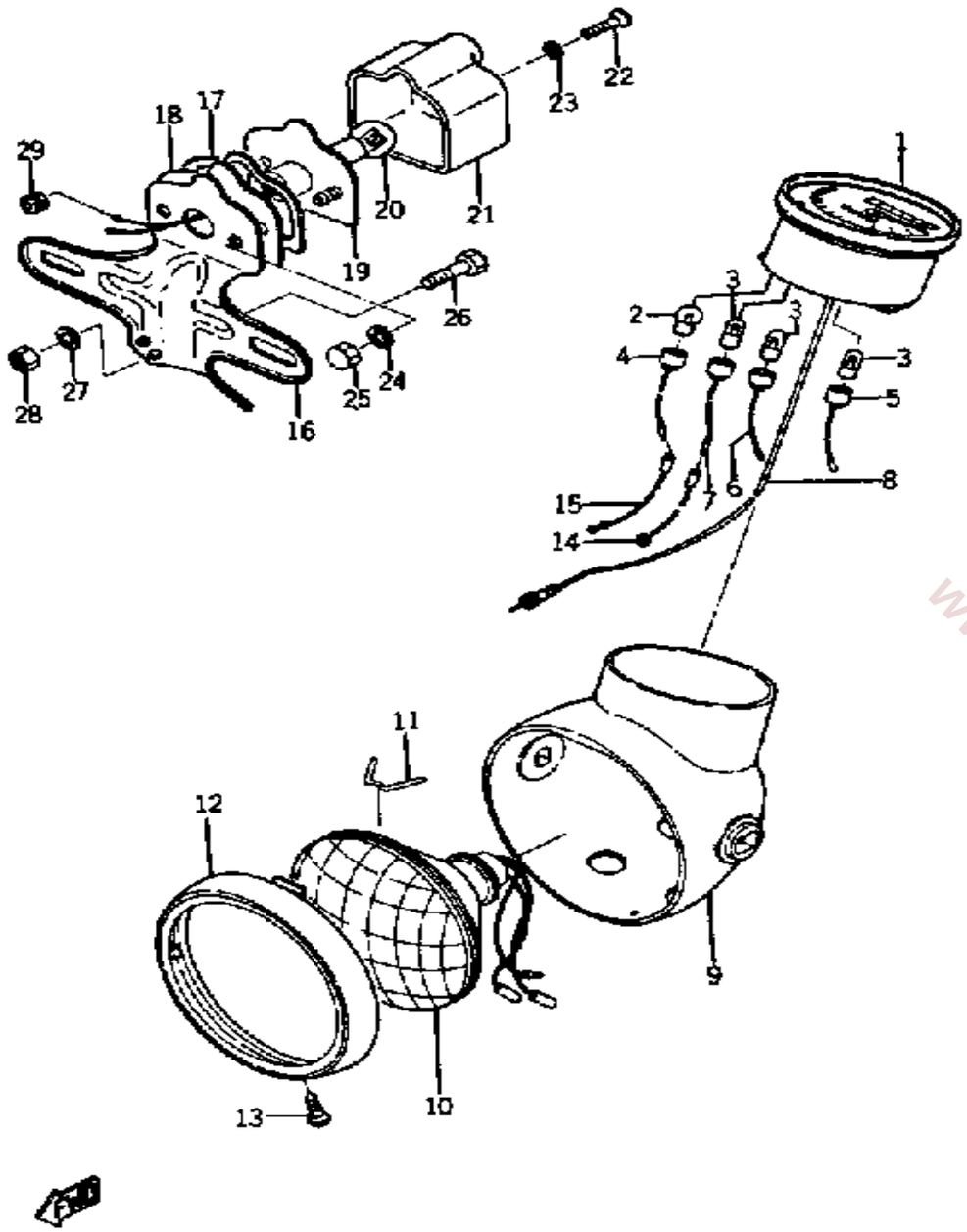

Ref. No.	Part Number	Description	Qty	Remarks
28	95380-06600-00	NUT, HEXAGON	4	
29	90480-12013-00	GROMMET	1	

www.ClassicCycles.org

ELECTRICAL

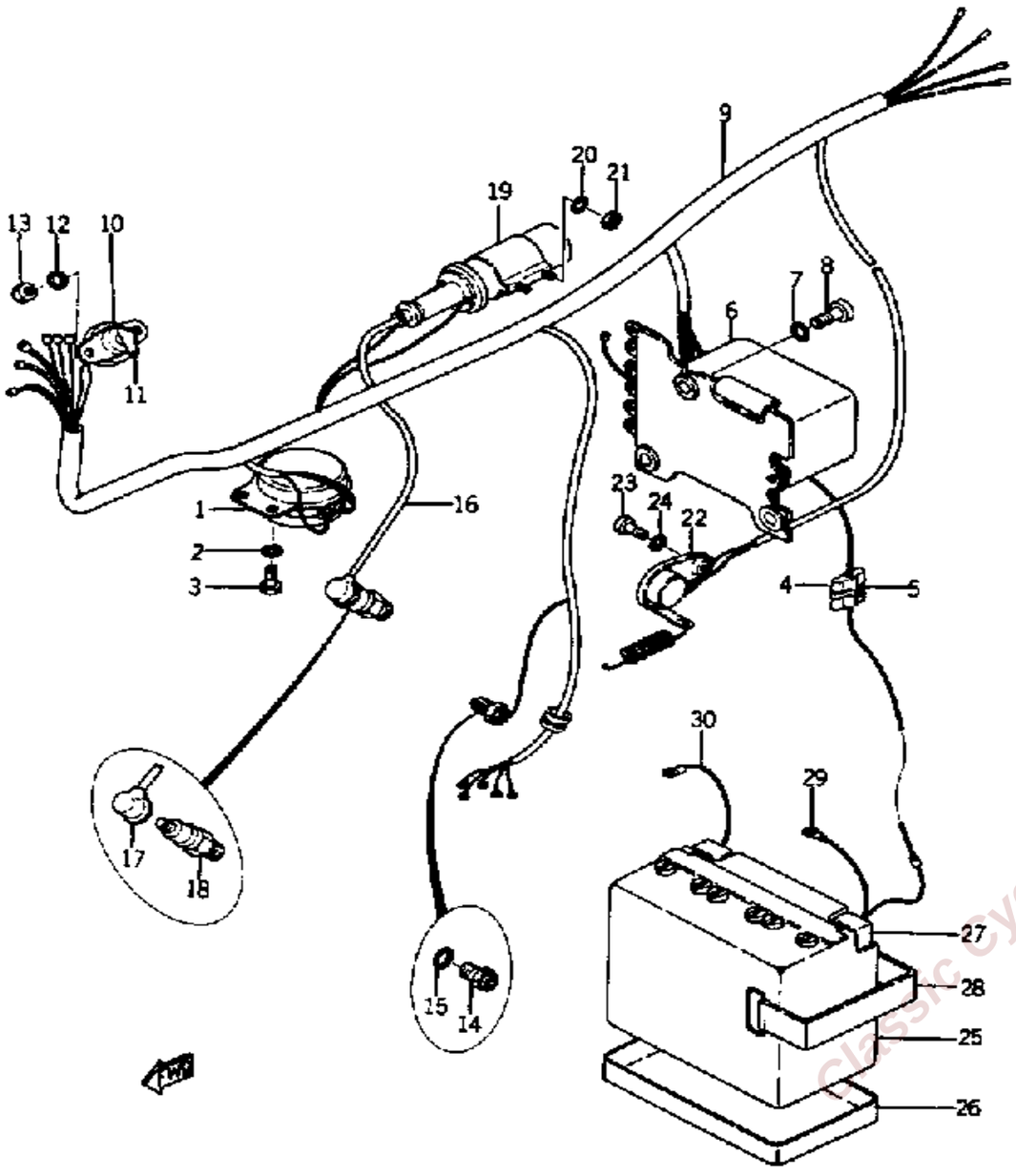

Ref. No.	Part Number	Description	Qty	Remarks
1	(131-83371-23-00)	HORN	1	
2	92990-08100-00	WASHER, SPRING	2	
3	97313-08020-00	BOLT, HEXAGON	2	
4	2UJ-82150-01-00	FUSE HOLDER ASSEMBLY (2UJ-82150-00-00)	1	
5	1A0-82161-00-00	. FUSE (20A) (148-82151-00-00)	3	
6	(137-81910-11-00)	VOLTAGE REG ASSEMBLY 0 1	1	
	(137-81910-11-00)	VOLTAGE REG ASSEMBLY 0 1	1	001~
7	92995-06100-00	WASHER, SPRING	3	
8	98503-06014-00	SCREW, PAN HEAD (92501-06015)	3	
9	(137-82590-12-00)	WIRE HARNESS ASSEMBLY	1	
10	136-82509-19-00	UNAVAILABLE IN PRICE BOOK	1	
11	(137-82511-01-05)	KEY, MAIN SWITCH	2	N/A
12	92901-04100-00	WASHER, SPRING	2	
13	95301-04600-00	NUT	2	
14	136-82540-00-00	NEUTRAL SWITCH ASSEMBLY	1	
15	37R-82543-00-00	GASKET (136-82543-00)	1	
16	137-82341-01-00	CORD, HIGH TENSION 1 (3AD-82341-00-00)	1	
17	56J-82370-00-00	PLUG CAP ASSEMBLY	1	
18	NGK-B6HS0-00-00	PLUG, SPARK (B6HS)	1	
	NGK-B7HS0-00-00	PLUG, SPARK (NGK B7HS)	1	
19	(148-82310-60-00)	IGNITION COIL ASSEMBLY	1	
20	92995-06100-00	WASHER, SPRING	2	
21	95380-06600-00	NUT, HEXAGON	2	
22	(137-82530-00-00)	STOP SWITCH ASSEMBLY	1	
23	92503-05008-00	SCREW, PAN HEAD	1	
24	92990-05100-00	WASHER, SPRING	1	
25	(137-82110-79-00)	12N10-3B	1	

CONTINUED ON NEXT FRAME ➤

Classic Cycles Technical Resources

ELECTRICAL

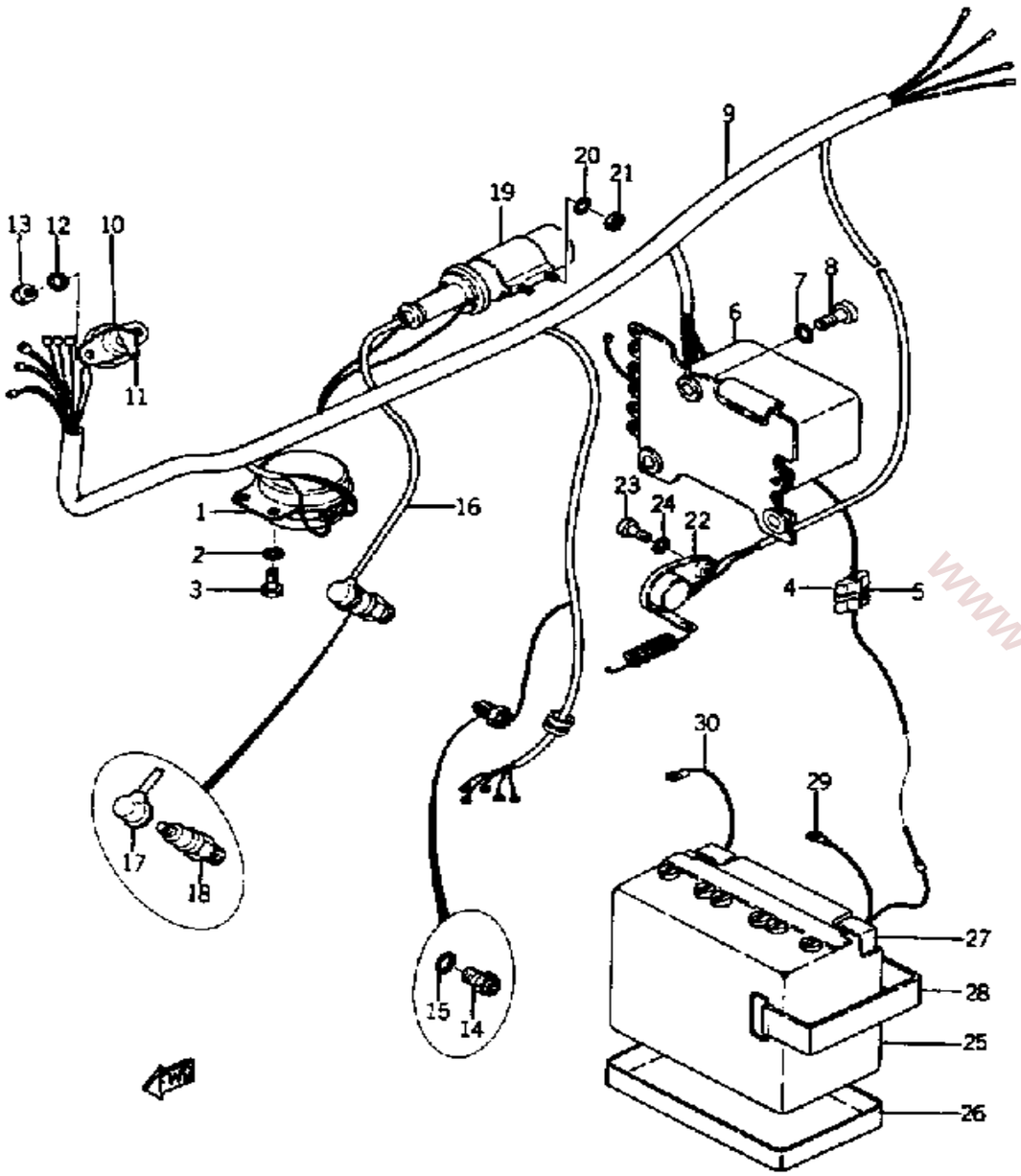

Ref. No.	Part Number	Description	Qty	Remarks
26	(137-82122-00-00)	SEAT, BATTERY	1	
28	26H-82131-00-00	BAND, BATTERY	1	
29	(137-82115-00-00)	WIRE, PLUS LEAD	1	
30	(123-82116-00-00)	WIRE, MINUS LEAD	1	

www.ClassicCycles.org

LEG SHIELD - TOOLS

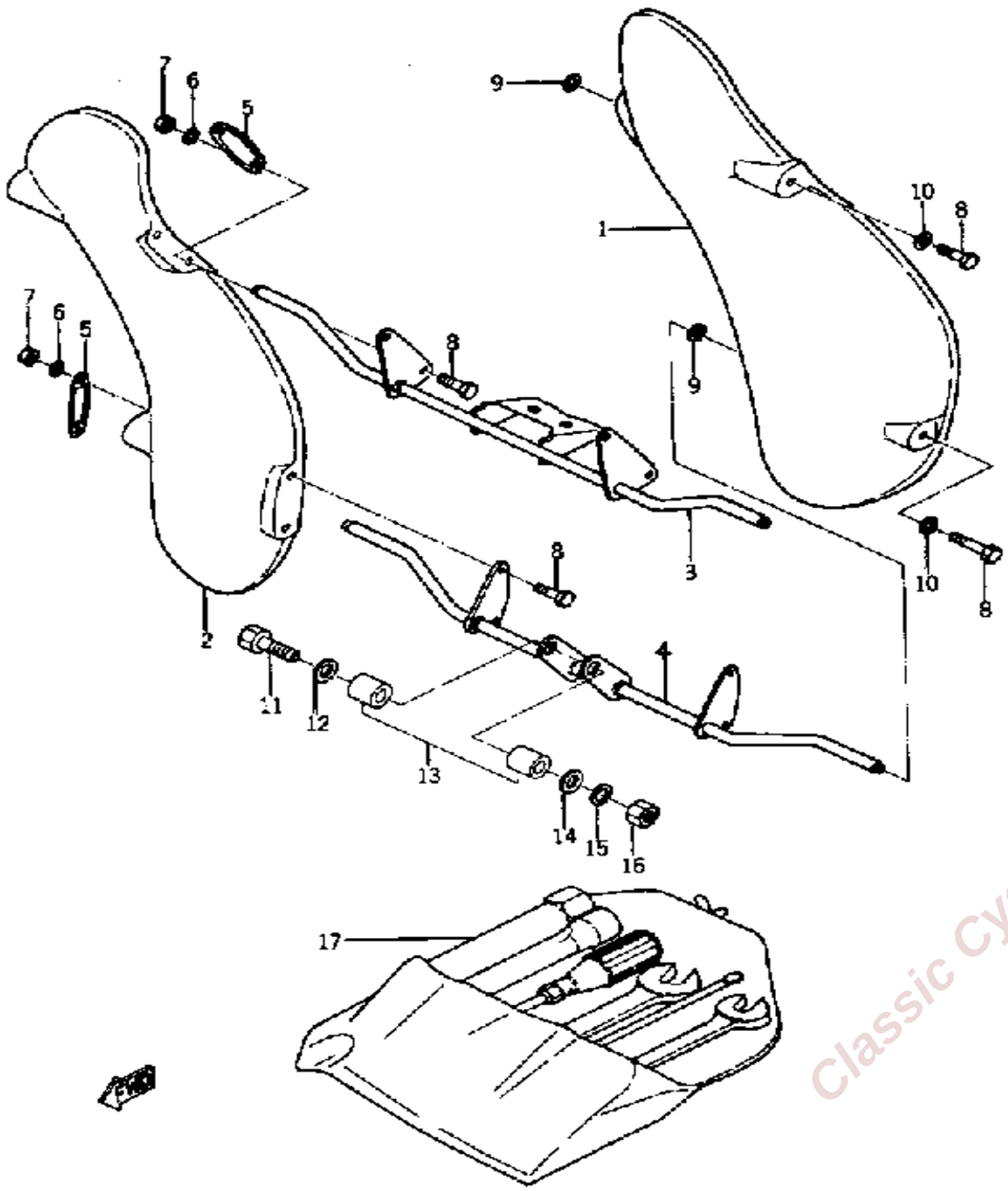

Ref. No.	Part Number	Description	Qty	Remarks
5	90201-06697-00	. . WASHER, PLATE	4	
6	92995-06100-00	. . WASHER, SPRING	8	
7	95380-06600-00	. . NUT, HEXAGON	8	
8	97313-06016-00	. . BOLT	12	
9	90201-06697-00	. . WASHER, PLATE	4	
12	90201-08107-00	. . WASHER, PLATE	1	
14	90201-06072-00	. . WASHER, PLATE	1	
15	92995-06100-00	. . WASHER, SPRING	1	
16	95380-06600-00	. . NUT, HEXAGON	1	
17	(396-28100-10-00)	TOOL KIT	1	

Classic Cycles Technical Resources